ARTICLE 21
STANDARD DESIGN SPECIFICATIONS

Division I. Generally.
Sec. 21-1. Standard Design Specifications.
Sec. 21-2. Other Design Specifications.
[Secs. 21-3 to 21-10 Reserved].

Division II. Streets.
Sec. 21-11. Street Base and Pavement Requirements.
Sec. 21.12. Minimum Sight Distance.
Sec. 21-13. Vertical Curves.
Sec. 21-14. Horizontal Alignment.
Sec. 21-15. Tangents.
Sec. 21-16. Temporary Turnaround.
Sec. 21-17. Curb and Gutter.
Sec. 21-18. Slopes and Shoulder Improvements.
Sec. 21-19. Specifications for Acceleration/Deceleration Lanes.
[Secs. 21-20 to 21-30 Reserved].

Division III. Utilities Generally.
Sec. 21-31. Utility Plans.
Sec. 21-32. Underground Utilities.
Sec. 21-33. Pavement Cuts.
[Secs. 21-34 to 21-40 Reserved].

Division IV. Storm Drainage.
Sec. 21-41. Storm Design Standard.
Sec. 21-42. Method of Sizing Detention Ponds.
Sec. 21-43. Emergency Overflow Device.
Sec. 21-44. Discharge Locations.
Sec. 21.45. Hydrology Study.
Sec. 21-46. Pond Tie-in to Existing Pipe.
Sec. 21-47. Slopes.
Sec. 21-48. Pond Depth.
Sec. 21-49. Pipe Slopes.
Sec. 21-50. Pipe Sizing.
Sec. 21-51. Design Standard for Catch Basins.
Sec. 21-52. Street Runoff Design Standard.
Sec. 21-53. Subdrainage.
Sec. 21-54. Bridges.
Sec. 21-55. Riprap.
Sec. 21-56. Exit Velocity.
Sec. 21-57. Breach Analysis for Lakes.
Sec. 21-58. Cross-drain Pipes.
Sec. 21-59. Inlet and Outlet Specifications.

Sec. 21-60. Storm Pipe Length.
Sec. 21-61. Junction Boxes.
Sec. 21-62. Stormwater Ditches.
Sec. 21-63. Pipe Materials.
Sec. 21-64. Pipe Installation and Maintenance.
Sec. 21-65. Minimum Clearance.
Sec. 21-66. Trench Construction.
Sec. 21.67. Driveway Culverts.
Sec. 21-68. Field Changes.
[Secs. 21-69 and 21-70 Reserved].

Division V. Public Water System.
Sec. 21-71. Residential Water Supply Pressure.
Sec. 21-72. Fire Protection.
Sec. 21-73. Minimum Required Fire Flow.
Sec. 21-74. Fire Hydrant Spacing.
Sec. 21-75. Water Main Size.
Sec. 21-76. Waiver of Water Main Size Requirements.
Sec. 21-77. Pressure Testing.
Sec. 21-78. Water Meters.
Sec. 21-79. Location of Water Lines.
Sec. 21-80. Service Laterals.
Sec. 21-81. Private Fire Service Systems.
Sec. 21-82. Ductile Iron Pipe.
Sec. 21-83. Copper Tubing for Water Service.
Sec. 21-84. Steel Casing Pipe.
Sec. 21.85. Pipe Fittings.
Sec. 21-86. Butterfly Valves.
Sec. 21-87. Gate Valves.
Sec. 21-88. Valve Boxes.
Sec. 21-89. Air and Vacuum Relief Valve Assemblies.
Sec. 21-90. Fire Hydrants.
Sec. 21-91. Tapping Saddles.
Sec. 21-92. Mechanical Joint Plugs.
Sec. 21-93. Pipe Connection Couplings.
Sec. 21-94. Curb Stops.
Sec. 21-95. Corporation Cocks.
Sec. 21-96. P.V.C. Casing Pipe.
Sec. 21-97. Meter Boxes (5/8-inch by ¾-inch).
Sec. 21-98. Tapping Valves.
Sec. 21-99. Tapping Sleeves (Tees).
[Secs. 21-100 to 21-110 Reserved].

Division VI. Public Sewerage System.

Sec. 21-111. Restrictions on Sewers.
Sec. 21-112. Design Period.
Sec. 21-113. Design Factors.
Sec. 21-114. Minimum Pipe Size.
Sec. 21-115. Depth.
Sec. 21-116. Slope.
Sec. 21-117. Connection of Different Size Pipes.
Sec. 21-118. Gravity Sewer Pipe.
Sec. 21-119. Ductile Iron Pipe (DIP) – Scope.
Sec. 21-120. Ductile Iron Pipe – Materials.
Sec. 21-121. Ductile Iron Pipe (DIP) – Joints.
Sec. 21-122. Polyvinyl Chloride (PVC) Sewer Pipe – Scope.
Sec. 21-123. Polyvinyl Chloride (PVC) Sewer Pipe – Materials.
Sec. 21-124. Polyvinyl Chloride (PVC) Sewer Pipe – Minimum Wall Thickness.
Sec. 21-125. Polyvinyl Chloride (PVC) Sewer Pipe – Fittings.
Sec. 21-126. Polyvinyl Chloride (PVC) Sewer Pipe – Pipe and Fittings Test.
Sec. 21-127. Polyvinyl Chloride (PVC) Sewer Pipe – Pipe Stiffness.
Sec. 21-128. Polyvinyl Chloride (PVC) Sewer Pipe – Fusion Quality.
Sec. 21-129. Polyvinyl Chloride (PVC) Sewer Pipe – Joint Tightness.
Sec. 21-130. Polyvinyl Chloride (PVC) Sewer Pipe – Installation.
Sec. 21-131. Polyvinyl Chloride (PVC) Sewer Pipe – Deflection Limit.
Sec. 21-132. Polyethylene Pipe (H.D.P.E.) – Scope.
Sec. 21-133. Polyethylene Pipe (H.D.P.E.) – Class.
Sec. 21-134. Polyethylene Pipe (H.D.P.E.) – Material.
Sec. 21-135. Polyethylene Pipe (H.D.P.E.) – Pipe Dimensions.
Sec. 21-136. Polyethylene Pipe (H.D.P.E.) – Joints.
Sec. 21-137. Polyethylene Pipe (H.D.P.E.) – Pipe Stiffness.
Sec. 21-138. Polyethylene Pipe (H.D.P.E.) – Retest and Rejection.
Sec. 21-139. Polyethylene Pipe (H.D.P.E.) – Deflection Limit.
Sec. 21-140. Reinforced Concrete Pipe (R.C.P.) – Scope.
Sec. 21-141. Reinforced Concrete Pipe (R.C.P.) – Quality Assurance.
Sec. 21-142. Reinforced Concrete Pipe (R.C.P.) – Testing.
Sec. 21-143. Reinforced Concrete Pipe (R.C.P.) – Guarantee.
Sec. 21-144. Reinforced Concrete Pipe (R.C.P.) – Materials.
Sec. 21-145. Reinforced Concrete Pipe (R.C.P.) – Lining.
Sec. 21-146. Steel Pipe.
Sec. 21-147. Precast Concrete Manholes.
Sec. 21-148. Casings.
[Secs. 21-149 and 21-150. Reserved].

Division VII. Wastewater Treatment Facilities.

Sec. 21-151. State Rules.
Sec. 21-152. Local Design Modifications.
Sec. 21-153. Local Inspection and Approval.
Sec. 21-154. Acceptance for Operation.
Sec. 21-155. Operation and Maintenance Manual.
Sec. 21-156. Maintenance and Payment Bonds.
Sec. 21-157. Maintenance.
Sec. 21-158. Relocation of Existing Facility.
Sec. 21-159. Registered Professional Engineer Required.
[Sec. 21-160 Reserved].

Division VIII. Wastewater Lift Station Specifications.

Sec. 21-161. Lift Station Site Requirements.
Sec. 21-162. Pumps.
Sec. 21-163. Pump Features.
Sec. 21-164. Design Features.
Sec. 21-165. Force Main.
Sec. 21-166. Electrical.
Sec. 21-167. Pump Control System.
Sec. 21-168. Permanent, In-place Generator.
Sec. 21-169. Stand-by Power.
Sec. 21-170. Construction Plan Submission Requirements.
Sec. 21-171. Shop Drawings.
Sec. 21-172. Inspection and Certification.
Sec. 21-173. Operations and Maintenance Manuals.
Sec. 21-174. Warranty.

[Division IX and Division X Reserved.]

Division XI. Standard Drawings – Streets.

400.01. Paved Residential Street – Cross Section Detail.
400.02. Industrial/Commercial Street – Cross Section Detail.
400.03. Cul-de-sac, Residential.
400.04. Cul-de-sac, Industrial/Commercial.
400.05. Subdivision Entrance Detail with Deceleration Lane.
400.06. Subdivision Entrance Detail.
400.07. Commercial/Industrial Driveway Detail.
400.08. Landing Requirements for Street Intersections.
400.09. Development Entrance Sight Distance.
400.10. Commercial Driveway on Existing Street.
400.11. Curb Details – Residential, Commercial, and Industrial.
400.12. [Reserved.]
400.13. Typical Street Cut Repair.
400.14. Typical Driveway Cut Repair.
400.15. Utility Locations – Residential Street.

400.16. Utility Locations – Industrial/Commercial Street.
[400.17 Reserved.]
400.18. Sidewalk Location (50' R/W).
400.19. Utility Locations (50' R/W).

Division XII. Standard Drawings – Water.
401.01. Typical Water Main at Cul-de-sac.
401.02. Typical Fire Hydrant Installation.
401.03. 3/4" Water Meter Location.
401.04. Residential Water Meter Installation.
401.05. House Service Installation.
401.06. Compound Meters and Vault.
401.07. Detector/Water Meters and Vault.
401.08. Water A & V Release Valve Assembly.
401.09. Typical Road Crossing.
401.10. Concrete Blocking Detail.
401.11. Concrete Thrust Collar.
401.12. Typical Valve Installation.
401.13. Concrete Valve Marker.
401.14. Blow-off Valve Assembly.

Division XIII. Standard Drawings – Sewer.
402.01. Precast Concrete Manhole.
402.02. Standard Vented Manhole.
402.03. Shallow Precast Concrete Manhole Detail.
402.04. Standard Manhole Plans.
402.05. Manhole Step.
402.06. Standard Manhole Frame and Cover.
402.07. Manhole Frame Grade Adjustment.
402.08. Sewer Service Lateral.
402.09. Sewer Service Location Detail.
402.10. Cleanout Detail.
402.11. Concrete Encasement.
402.12. Typical Pipe Adapter.
402.13. Sewer Pipe Anchor.
402.14. Pipe Class "A" Bedding.
402.15. Pipe Class "B" Bedding.
402.16. Pipe Class "C" Bedding.
402.17. Pipe Class "B" Bedding (P.V.C).
402.18. Sewer Air and Vacuum Valve Assembly.
402.19. Force Main Connection to Manhole.
402.20. Sewer Casing Spacing Detail.

Division I. Generally.

Sec. 21-1. Standard Design Specifications.

This article is titled The Standard Design Specifications of Powder Springs, also referred to in this code as "standard details."

Sec. 21-2. Other Design Specifications.

(a) Unless otherwise specially set forth in this code or the standard design specifications of this article, all of the materials, methods of construction, and workmanship for the work covered in reference to street construction and storm drainage construction shall conform to the latest standard specifications of the Cobb County Department of Transportation, or if no such standard detail covers the subject improvement, the standard specifications of the Georgia Department of Transportation.

(b) Design criteria and standards not specifically set forth in this Article specifically or this Development Code generally, and not addressed in county or state Department of Transportation specifications, shall conform to the latest edition of the *AASHTO Policy on Geometric Design of Highways and Streets.*

[Secs. 21-3 to 21-10 Reserved].

Division II. Streets.

Sec. 21-11. Street Base and Pavement Requirements.

(a) **Graded aggregate base course.** The base course shall consist of mineral aggregate and may be a combination of natural deposit or a blend of the materials specified. All materials are subject to approval by the public works director. If a blend of materials is used, it shall be blended through a base plant that meets the latest specifications of the Georgia State Highway Department Specification 815.

(b) **Thickness.** Street base material shall conform to the thickness as required for the street type in table below.

(c) **Extent.** The street base shall extend fully under curb and gutter at least 2 inches thick. For streets without curbs, the base shall extend at least 6 inches beyond the edge of payment.

(d) **Unsuitable material.** Wherever unsuitable material is found in the subgrade, the unsuitable material shall be replaced with graded aggregate stone.

(e) **Pavement topping – prime.** After the base has been placed, mixed, compacted, shaped, inspected and accepted, it shall be primed with suitable asphaltic materials as specified in Department of Transportation Specification 412.

(f) **Pavement topping – roadway binder.** After the prime has been inspected and accepted, the roadway or street shall be surfaced with Type "B" binder as required for the street type in the table below.

(g) **Pavement topping – tack coat.** Tack coat shall be applied on a prepared road surface according to the requirements of Georgia Department of Transportation Specification 413.

(h) **Pavement topping – final coat.** Final topping shall consist of a course of Type "E" asphaltic cement as required for the street type in the table below.

(i) **Staged paving.** If two-stage paving for residential streets is approved by the public works director, the developer shall place the binder course on the street but may delay final paving. Prior to the expiration of the 2-year maintenance bond, the binder surface will be primed with suitable asphaltic materials as specified in Department of Transportation Specification 412. After the prime has been inspected and accepted, the roadway or street shall be surfaced with a minimum 1½ inch of Type "E" asphaltic concrete wearing surface. No surface treatment pavement as a finished wear surface will be accepted. All asphaltic concrete will be mixed in an asphalt plant meeting the latest requirements of the Georgia Department of Transportation.

Street Classification	Base	Binder	Topping
Arterial	Per Georgia DOT	Per Georgia DOT	Per Georgia DOT
Major Collector	10 inches GAB	3 inches B	1½ inches E
Minor Collector Street	10 inches GAB	3 inches B	1½ inches E
Minor Collector—Residential	8 inches GAB	2 inches B	1½ inches E
Local Commercial	8 inches GAB	2 inches B	1½ inches E
Local Commercial or Industrial	10 inches GAB	3 inches B	1½ inches E
Local Residential	6 inches GAB	2 inches B	1½ inches E

Note: See also standard detail 400.02 in article 21 of this development code.

Sec. 21-12. Minimum Sight Distance.

Sight distance requirements at intersections shall be provided in the table below. Distances shall be measured from the centerline of ingress/egress road extending to either side of the abutting street along thoroughfare a distance of 20 feet from the edge of the thoroughfare. Intersections within subdivisions shall be designed for a minimum sight distance of 160 feet, unless the

required design speed exceeds 25 miles per hour. The design speed for sight distance requirements at entrance intersections shall be the existing city or county road speed limit.

Minimum Sight Distance

Design Speed	Distance in Feet (Each Way) City Standard	Distance in Feet (Each Way) (Cobb County, GDOT, AASHTO)
25	200	280
35	325	390
45	550	500
55	750	610

Note: the public works director may apply Cobb County/GDOT/AASHTO standard for sight distance in lieu of city standard.

The sight distance for horizontal curves at subdivision entrances is determined by the line of sight available 3.5 feet above the road surface. The sight distance is measured along the existing edge of pavement beginning at the centerline of the proposed entrance and ending where the line of sight intersects it. The line of sight is the projected line of visibility beginning at the entrance centerline and tangent to an obstruction 3.5 feet above the road surface. Examples of obstructions are vegetation, ground cover, signs, existing topography, etc.

Sec. 21-13. Vertical Curves.

All changes in grade shall be connected by a vertical curve so constructed as to afford a minimum sight distance, said sight distance being measured from the driver's eyes, which are assumed to be 3.5 feet in height above the pavement surface, to an object 2 feet high on the pavement.

Minimum length of vertical curves (for interior subdivision thru-streets and long cul-de-sacs) shall be per table below:

Algebraic Difference in Grades	**Vertical Curve Length**	
	Crest	**Sag**
1	90	100
2	90	100
3	90	100
4	90	100
5	90	100
6	96	116
7	112	135
8	128	155
9	144	174
10	160	194

11	176	213
12	192	232
13	208	252
14	224	271
15	240	290
16	256	310
17	272	329
18	288	348
19	304	368
20	320	387
21	326	402
22	332	415
23	334	425
24	336	430
25	338	435
26	340	440
27	342	445
28	344	450
29	346	455
30	348	460
31	350	464
32	352	468
33	354	472
34	356	476
35	358	480
36	360	484

Sec. 21-14. Horizontal Alignment.

Where a deflection angle of more than 10 degrees occurs in the alignment of a street, the radius of curvature of the center line of said street shall be not less than as specified in the table below:

Street Classification	**Minimum Radius of Curvature of Center Line**
Arterial Street	Per Georgia DOT specifications
Major Collector	300 feet
Minor Collector Street	300 feet
Local Street	100 feet

Sec. 21-15. Tangents.

Curved streets shall have a minimum tangent of 100 feet at intersections as measured from the centerline of cross streets. A tangent of a least 200 feet in length shall be introduced between reverse curves on collector streets (and at least 100 feet on local streets).

Sec. 21-16. Temporary Turnaround.

Temporary turnarounds shall consist of a tack coat and 1 inch of asphalt.

Sec. 21-17. Curb and Gutter.

(a) **Local residential streets.** Local residential street curbs shall be Portland cement concrete, 6-inch x 24-inch x 9-inch vertical for roll back type (see standard detail), with a minimum strength of 3,000 psi at 28 days.

(b) **Collector and local commercial or industrial streets.** Curbs along collectors and local commercial or industrial street curbs shall be Portland cement concrete, 6-inch x 24-inch x 12-inch vertical type only, with a minimum strength of 3,000 psi at 28 days.

(c) **Additional specifications.** Curbing along streets shall meet the following standards:

1. Developer's engineer or surveyor shall set line and grade.

2. One-half inch expansion joints of pre-molded bitumastic expansion joint material shall be provided at all radius points and at intervals not to exceed 50 feet in the remainder of the curb and gutter.

3. The public works director shall individually approve special curbing design (center islands, etc.).

4. Curb and gutter shall be set true to line and grade and finished by skilled workers to the section shown on the plans.

5. Inferior workmanship or construction methods resulting in unsightly curb and gutter will be cause for rejection of the finished work.

6. All curbing shall be backfilled and grassed.

7. Adequate storm drainage structures shall be provided. The curb and gutter shall be constructed so as to present a smooth, even line both horizontally and vertically.

(d) **Valley gutter.** A valley gutter may be used across a driveway at its intersection with a street. However, valley gutters shall not be allowed across streets at street intersections unless specifically approved by the public works director.

Sec. 21-18. Slopes and Shoulder Improvements.

(a) **Streets with curb and gutter.** On streets with curb and gutter, the shoulders shall slope ¼ inch to the foot toward the roadway for at least 13 feet (for residential streets, 17 feet

for industrial/commercial streets) from back of curb, and no more than 1/8 inch to the foot for the remainder of the right-of way width.

(b) **Streets with swale ditch drainage.** On streets with swale ditch drainage, the shoulders shall slope ¾ inch to the foot away from the roadway for at least 5 feet to the drainage channel. The maximum slope for the drainage channel shall be 2 feet of run for each 1 one foot of fall, with a minimum 2-foot wide channel at the bottom of the swale.

Sec. 21-19. Specifications for Acceleration/Deceleration Lanes.

(a) Minimum pavement width (not including curbs) and right-of-way to accommodate acceleration and deceleration lanes at development entrances are shown on the following table:

Street Classification	Pavement Width (ft.)	Right-of-way From Centerline (ft.)	Radii (ft.)
Arterial	24+	50+	40
Major Collector	24	40	40
Minor Collector	24	30	25
Local/Unclassified	20	25	25

(b) Lane length is measured 150 feet from radius point to beginning of taper (per standard drawing 400.05; see article 21 of this development code). Tapers are 50 feet. Vertical face curb and gutter is required through the radii, excluding the tapers. The additional lane can be stopped at the projected property line if there is inadequate right-of-way or excessive cut or fills to install the lane. In this case, the tapers would start at the projected property line unless excessive cut or fills would encroach on the right-of-way limits of the abutting property.

(c) The cost of any catch basins that must be constructed when an existing City or County road is required to be developed will be paid by the developer.

(d) Utilities (if required by the utility provider) and drain pipes shall be relocated at the developer's expense outside of the acceleration/deceleration lanes. Waterlines can remain beneath the additional lanes.

(e) The area behind all curbing shall be backfilled and landscaped.

[Secs. 21-20 to 21-30 Reserved].

Division III. Utilities Generally.

Sec. 21-31. Utility Plans.

All utility construction plans within city right-of-way shall be reviewed and approved by the public works director prior to utility construction or placement.

Sec. 21-32. Underground Utilities.

All private utilities that will cross under pavement shall be installed completely throughout the subdivision prior to any roadway base being applied. Installation of approved utility sleeves shall be considered as an alternative.

Sec. 21-33. Pavement Cuts.

(a) **Policy.** The City's policy is that no existing city roads can be open cut unless unusual circumstances warrant it as approved by the public works director. All utilities beneath pavement shall be installed and the ditch backfilled and thoroughly compacted before any pavement or base is installed, or the pipes shall be bored if installed after street construction.

(b) **Trenching.** If the City allows open cutting all trenches under existing paving shall be backfilled and compacted in 6-inch lifts and excavated to allow for 8 inches of 3,000 psi concrete and 1½ inches of asphaltic concrete to be placed. Where permitted, all trenches for underground utilities shall be backfilled and compacted the same day the trench is opened. Trenches under the paving shall be returned to 95% compaction. Trenches elsewhere shall be returned to 90% compaction.

(c) **Width of paving cut**. The paving cut shall be widened to a minimum of 9 inches beyond the edges of the trench and excavated to allow for the 8 inches of 3000 psi concrete and 1½ inches of asphaltic concrete to be placed. The edges of the paving cut shall be smooth. A final wearing surface of 1½ inches of Type "E" asphaltic concrete shall be poured and rolled after the concrete is cured. See Standard Detail 400.13 for illustration.

(d) **Utility manholes and valve boxes**. All utility manholes and valve boxes shall be brought to the finished grade within the roadway section.

[Secs. 21-34 to 21-40 Reserved].

Division IV. Storm Drainage.

Sec. 21-41. Storm Design Standard.

(a) Sizing and location of all existing and proposed drainage structures shall be the responsibility of a registered professional engineer, subject to approval by the public works director.

(b) The drainage formula used in determining size of drainage structures shall be determined by the developer's engineer, according to accepted engineering practice, subject to approval of the public works director.

(c) The 25-year storm event shall be used in designing the storm drains. In cases where a spring, creek, or other watercourse traverses the property, the 100-year storm event will be used for design.

(d) All stormwater detention facilities shall be designed per the requirements of Article 11 of this development code.

Sec. 21-42. Method of Sizing Detention Ponds.

The reservoir routing method or an equivalent method shall be used in sizing detention ponds. The bowstring method is not acceptable.

Sec. 21-43. Emergency Overflow Device.

An emergency overflow device (which does not include the throttling device) for a detention pond shall be designed to pass the 100-year peak developed inflow without overtopping the dam.

Sec. 21-44. Discharge Locations.

Pond discharge locations shall be in defined drainage ditches.

Sec. 21-45. Hydrology Study.

All development plans will require a hydrology study certified by a registered engineer. The developer's engineer shall include in the hydrology study a discussion of existing conditions downstream of the detention pond, including the flow capacity of downstream drainage structures, and an explanation of how downstream property owners will not be adversely affected by the concentrated runoff. If the downstream system is inadequate, the developer is required to either improve the downstream drainage structure or provide additional storage in the detention facility.

Sec. 21-46. Pond Tie-in to Existing Pipe.

If there is an existing storm drainage system within 150 feet of the discharge point of the outlet pipe for the pond, then the developer shall extend the outlet pipe and tie-in to the existing system.

Sec. 21-47. Slopes.

The steepest fill slopes shall be 3:1, and cut slopes shall be no steeper than 2:1. Slopes proposed to be steeper require approval of the director of public works.

Sec. 21-48. Pond Depth.

If a pond is deeper than four feet, a chain link or privacy fence shall be required. The fence shall be six feet high. Fence posts shall be set in concrete 10 feet on centers. There shall be a minimum 10 foot wide gate for access. The fence shall not be installed across the slope of a dam or dike, but installed completely around the pond and including suitable access.

Sec. 21-49. Pipe Slopes.

Storm drainage pipes shall be sloped so as to maintain a minimum velocity of 3 fps so that sediment will not collect.

Sec. 21-50. Pipe Sizing.

State Department of Transportation Standard 1030D (or most current) shall be used in determining class (concrete) or gauge of pipe under fill, method of backfilling and pipe installation.

Sec. 21-51. Design Standard for Catch Basins.

Storm sewer catch basins, drop inlets, manholes, and junction boxes shall be designed by the developer's engineer to Georgia Department of Transportation Standards and subject to final approval by the public works director. Catch basins shall be located outside of intersection radii unless unusual circumstances cause undue hardship, in which case the public works director may waive this requirement.

Sec. 21-52. Street Runoff Design Standard.

Street water runoff shall be designed using the gutter spread formula and shall be limited to a maximum distance as follows:

(a) 500 feet on grades up to 7%.

(b) 400 feet on grades from 7% to 10%.

(c) 250 feet on grades over 10%.

(d) Cul-de-sacs on downhill street grades shall require catch basin throat design and cul-de-sac grading detail.

Sec. 21-53. Subdrainage.

Subdrainage will be installed to control the surplus ground water by intercepting side hill seepage or by lowering or regulating the ground water level where such conditions exist.

Sec. 21-54. Bridges.

Bridges shall be designed for a 100-year storm event.

Sec. 21-55. Riprap.

Provide riprap at all downstream discharge points of storm drains.

Sec. 21-56. Exit Velocity.

Exit velocities from storm drain pipe for the 50-year storm shall not exceed 10 fps without additional energy dissipators (not including required riprap).

Sec. 21-57. Breach Analysis for Lakes.

If a new or existing lake is proposed as a part of a subdivision or land development, the developer shall be required to submit a breach analysis and show the dam breach zone on the plans.

Sec. 21-58. Cross-drain Pipes.

When located under a street, cross-drain pipes shall be no less than 18 inches in size. No storm drain pipe running parallel to the existing primary road shall be located beneath any acceleration/ deceleration lane. The public works director may modify or waive this requirement if unusual circumstances exist, such as topography.

Sec. 21-59. Inlet and Outlet Specifications.

The inlet and outlet end of all storm drain pipes (except driveway pipe) shall have either flared-end sections or concrete headwalls that meet the standards of Georgia Department of Transportation 1120 or 1125.

Sec. 21-60. Storm Pipe Length.

(a) For storm drain pipes 36 inches or smaller, pipes shall extend 20 feet past the rear of any building. For storm drains larger than 36 inches, extend pipes 20 feet past the rear of any buildings and size the drainage ditch on each end of the pipe to limit the runoff velocity to less than 5 fps, or riprap the ditch.

(b) For pipes less than 42 inches, the maximum continuous length of pipe shall be 300 feet.

Sec. 21-61. Junction Boxes.

Junction boxes having access to the pipe shall be constructed to meet the requirements of State Department of Transportation Standard 1030D (or most current).

Sec. 21-62. Stormwater Ditches.

All man-made ditches between storm drain pipes and downstream of storm drain pipe shall be designed by a registered professional engineer. The ditch profile and cross-sections every 50 feet shall be shown on the plans. The plans shall show the velocity and flow at each cross-section. Stormwater velocity shall not exceed 5 fps unless the ditches are lined.

Sec. 21-63. Pipe Materials.

Only concrete pipe shall be used within street rights-of-way. Concrete pipe shall be reinforced within the right-of-way but may be plain pipe outside of the right-of-way.

Metal pipe shall be fully coated and only used outside of the right-of-way.

Sec. 21-64. Pipe Installation and Maintenance.

(a) Pipe installation shall conform to Georgia Department of Transportation Standard Specifications for construction of roads and bridges.

(b) Before any traffic over a storm drain is allowed, the developer shall provide an adequate depth and width of compacted backfill to protect the structure from damage or displacement.

(c) The developer shall remove any debris or silt that constricts the flow through a pipe as often as necessary to maintain drainage. All pipe structures shall be cleaned before the work is accepted.

(d) Any damage or displacement that may occur due to traffic or erosion shall be repaired or corrected at the developer’s expense.

Sec. 21-65. Minimum Clearance.

(a) Minimum clearance shall be 1 foot between the bottom of the base or sub-base, if used, and the exterior crown of the culvert.

(b) There shall be a minimum of 6 inches between underground utilities and the exterior crown of culverts.

Sec. 21-66. Trench Construction.

Trench construction for storm drainage pipe shall be in accordance with State Department of Transportation Standard 1030D (or most current).

Sec. 21-67. Driveway Culverts.

Where a wet weather stream exists between the proposed road and 20 feet into the lot, the design professional shall size the driveway culvert as if the driveway was at the lowest point on that lot. The construction plans shall show the minimum driveway pipe size required.

Sec. 21-68. Field Changes.

Changes in construction plans caused by field conditions shall be made at the direction of the public works director, with the cost of such changes to be paid by the developer.

[Secs. 21-69 and 21-70 Reserved].

Division V. Public Water System.

Sec. 21-71. Residential Water Supply Pressure.

Residential water supply for domestic use shall be in accordance with the following table "Instantaneous Water Demands for Residential Areas," and at a minimum pressure of 20 psi.

Instantaneous Water Demands for Residential Areas

Total Number of Residences Served	GPM per Residence	Total Number of Residences Served	GPM per Residence
1 to 5	8.0	90	2.1
10	5.0	100	2.0
20	4.3	150	1.6
30	3.8	200	1.3
40	3.4	300	1.2
50	3.0	400	0.9
60	2.7	500	0.8
70	2.5	750	0.7
80	2.2	1,000	0.6

Sec. 21-72. Fire Protection.

All plans for development must meet all applicable fire protection codes.

Sec. 21-73. Minimum Required Fire Flow.

The following minimum quantities of water in gallons per minute (gpm) are required prior to development of the property:

(a) Residential, single-family: 500 gpm for 30 minutes.

(b) Residential, Multi-family: 750 gpm for 30 minutes.

(c) Shopping centers: 750 gpm for 30 minutes.

(d) Motels, light industry, and schools: 750 gpm for thirty (30) minutes.

(e) Heavy industry, large/tall buildings (warehouses, office buildings, institutional): Minimum 1,000 gpm for 45 minutes.

Sec. 21-74. Fire Hydrant Spacing.

Spacing of fire hydrants shall be as follows. Hose lay distance is defined as being measured along the route a piece of fire apparatus must travel in laying a fire hose from the fire to the fire hydrant.

(a) **Residential, single-family.** Single-family residential developments shall have a maximum hose lay distance of 500 feet from the hydrant to the most distant building served by that hydrant. Fire hydrants shall normally be located at all intersections, and shall be located at the end of the line on all cul-de-sacs.

(b) **Residential, multi-family.** Fire hydrants shall be spaced not more than 500 feet apart with additional fire hydrants located as necessary to permit all portions of buildings to be reached by hose lays of not more than 300 feet in length.

(c) **Shopping centers, malls, etc.** Fire hydrants spaced not more than 300 feet so all portions of buildings can be reached by hose lays of not more than 300 feet in length.

(d) **Motels, light industry, and schools.** Fire hydrants spaced not more than 500 feet so all portions of buildings can be reached by hose lays of not more than 300 feet in length.

(e) **Heavy/tall buildings.** Fire hydrants spaced not more than 300 feet apart so any portion of the building can be reached by hose lays of not more than 300 feet in length.

Sec. 21-75. Water Main Size.

(a) **Residential, single-family:** Single-family residential developments shall use a minimum of 6 inch diameter mains unless larger size mains are called for in a water system master plan.

(b) **Residential, multi-family:** Water mains of at least 8 inch diameter pipe shall be installed; 6 inch diameter pipe may be used only where it completes a gridiron and then only up to 600 feet in length between interconnecting mains of approved diameter.

(c) **Large shopping centers, malls, etc.:** Water fire mains to be no less than 8 inches diameter.

(d) **Commercial areas:** Commercial areas with less than 200,000 square feet use water main no less than 8 inches diameter.

(e) **Motels, light industry, and schools:** no less than 8 inches diameter.

(f) **Heavy industry, large/tall buildings**: no less than 10 inches diameter.

Sec. 21-76. Waiver of Water Main Size Requirements.

The public works director or his designated representative has the authority to waive the minimum water main sizes required in Sec. 21-75, provided that: a note is provided on plans as follows: "I have designed the water service installation for this facility in accordance with all applicable City water specifications in regards to fire flows and these conditions have been met." This note is to be signed and stamped by the engineer providing the calculations. Further, the development applicant provides the city with a copy of the calculations.

Sec. 21-77. Pressure Testing.

Water mains and fire hydrants shall be installed by the developer and approved by the public works director under water pressure and ready for fire fighting before any sheathing may be installed on walls and roof.

Sec. 21-78. Water Meters.

(a) Water lines shall be metered as required by the water provider.

(b) Each residential unit shall be individually metered.

(c) Water meters shall be located at the edge of the street right-of-way.

Sec. 21-79. Location of Water Lines.

(a) On existing roads, water lines shall be located on the south and west side of the road, within two feet of the right-of-way with a minimum bury of 42 inches below the level of the roadbed. Permission must be obtained from the public works director to vary from this requirement.

(b) Water lines on new residential streets shall be located on the south and west side of the street, 5 feet from the back of the curb with a minimum bury of 48 inches. For water lines on new streets, all curbing must be installed before any water lines are installed.

Sec. 21-80. Service Laterals.

(a) Service laterals shall be located with a minimum bury of 48 inches within the right-of-way and shallowing to a bury of 12 inches at the water meter location.

(b) Service laterals crossing any roads will be placed inside a minimum 1½-inch diameter casing.

(c) A "W" shall be sawed into the curb where each service tap is made for permanent location.

(d) Copper tubing shall be used for all service laterals. Ductile iron shall be required in all other locations.

(e) Water valves at intersections shall be located behind the curb.

(f) The required number of valves shall equal the number of streets in the intersection, minus one.

(g) A gate valve and a minimum of 36 feet of pipe shall be provided at the end of all lines for phased developments. The end of the line shall be provided with temporary plug and blocking.

(h) All water lines shall be looped to prevent accumulation of stagnant or contaminated water.

Sec. 21-81. Private Fire Service Systems.

(a) Any person making application for new fire service connections with private fire hydrant(s), hand hose connection(s), or sprinkler head(s) will be required to have an underwriter approved detector check meter or a factory mutual fire line meter installed as a part of the fire service system.

(b) When unauthorized water is used through a detector check meter in three or more billing periods in one calendar year, it shall be replaced with a factory mutual fire line meter. Unauthorized use of water is defined as non-fire fighting water and/or water use without prior notification and approval of the City.

(c) All domestic water supply must be metered with proper meter.

(d) Installation of detector check meters or factory mutual fire line meters as required by this section will be handled by the developer under supervision of the public works director. The cost of installation will be at a rate established for each individual site.

(e) The public works director shall have the authority to cut off water service to buildings whose owners refuse to comply with the provisions of this section upon 60 day notification.

(f) The regular monthly fire service standby charge shall be continued for fire service installation having a detector check or mutual fire line meter. The water that is measured by the detector check meter will be billed at 5 times the normal water charge. If the services of legal counsel are required to collect bills, the cost of counsel shall be added to the billing.

Sec. 21-82. Ductile Iron Pipe.

(a) Ductile iron pipe shall be designed in accordance with ANSI A21.50-81 and manufactured in accordance with ANSI A21, 51-81. Wall thickness class shall be Class 350 or latest revision.

(b) Ductile iron pipe shall have an outside asphaltic coating per ANSI A21.51-81. Pipe shall have standard cement lining inside with asphaltic seal coat per ANSI A21.4-80.

(c) Pipe joints, except where restrained or flanged joints are specified, shall be push-on or mechanical joint type, and pipe shall be in 18 foot to 20 foot nominal lengths with standard deflection pipe sockets. Where restrained joints are shown or specified on pipe larger than 12 inches diameter the joints shall be "Lock-Fast," lock-ring or equal.

Sec. 21-83. Copper Tubing for Water Service.

Service pipe shall be copper service pipe, type K, soft temper, seamless copper tubing, conforming to Federal Specification WW-T-T00. Flared joints will be used.

Sec. 21-84. Steel Casing Pipe.

Steel casing pipe, where specified, shall be steel pipe conforming to A.S.T.M. Designation A-139, Grade B, electric fusion welded steel pipe. The pipe shall have a minimum tensile strength of 35,000 psi. The exterior and interior of the pipe shall have a coal tar varnish coating.

Sec. 21-85. Pipe Fittings.

Fittings shall be ductile iron furnished in accordance with ANSI Specifications A21.10 (AWWA C110), latest revision, and shall be a minimum of 250 psi pressure class rating. Joints shall be mechanical joint with ductile iron ring or retainer glands conforming to ANSI Specification A21.11 (AWWA C111), latest revision. Cement mortar lining shall be furnished for pipe.

Sec. 21-86. Butterfly Valves.

Butterfly valves (valves 12 inches and larger) shall be bubble-tight closing at the rated pressure with flow in either direction, and shall be satisfactory for applications involving throttling service and frequent operations or operations after long periods of inactivity. Valves shall meet the full requirements of AWWA Standard C504-74 for 150 psi working pressure and shall be suitable for above ground or buried service.

(a) All interior ferrous surfaces of valves larger than 12 inch shall have a special epoxy coating meeting the requirements of AWWA C550.

(b) Valve bodies shall be equipped with integrally cast mechanical joint ends meeting ANSI A21.11 (AWWA C111). Mechanical joints shall be fitted with retainer glands with set screws on ductile iron pipe.

(c) Butterfly valves installed underground shall come equipped with the manual operator specified in the following paragraph.

(d) Manual operators shall be of the traveling nut, self-locking type and shall be designed to hold the valve in any intermediate position between fully open and fully closed without creeping or fluttering. Operators shall be equipped with mechanical stop-limiting devices to prevent overtravel of the disc in the open and closed positions. Valves shall close with a clockwise rotation. Operators shall be fully enclosed and designed for buried operation.

Sec. 21-87. Gate Valves.

Valves 10 inch and smaller shall be gate valves. These valves shall be non-rising stem design, iron body, bronze mounted and have double disc and parallel seat. Valves shall be designed for a minimum working pressure of 200 psi and shall have 2-inch square operating nuts, except in meter vaults where handwheels shall be installed. Valves shall have non-rising stems, shall open when turned to the left and shall meet AWWA Specifications. Class 150 valves with flanged connections shall have one 125 pound flanges conforming to ANSI B16.1, and Class 250 valves with flanged connections shall have 250 pound flanges. Mechanical joints shall be fitted with retainer glands with setscrews on ductile iron pipe. Gate valve shall be manufactured per City specifications.

Sec. 21-88. Valve Boxes.

Valve boxes for valves shall be approved standard cast iron, adjustable-shaft boxes having a minimum shaft diameter of 5¼ inches. The casting shall be coated with two coats of coal tar pitch varnish. The lids of all boxes shall bear the word “Water” or the letter “W.” Boxes shall meet City specifications.

Sec. 21-89. Air and Vacuum Relief Valve Assemblies.

(a) Air and vacuum relief valves shall be cast iron body and covers with bronze trim, stainless steel float, Buna-N-Seal, and shall be designed for a minimum working pressure of 150 psi.

(b) The valve shall be designed to exhaust large quantities of air during the filling period, and small quantities of air that collect in the line while operating under pressure. The valves shall be equal in all respects to Clow Corporation combination air release valves. Valves shall be of the size shown on the plans and called for in the proposal.

(c) Gate valves between water main and air relief valve shall be all bronze, solid wedge with screw connection equal to Jenkins Company’s Figure #370.

(d) Meter box shall be manufactured per City specifications.

(e) Air and vacuum release valves to be connected to the service main with tubing as shown in the standard detail drawings.

Sec. 21-90. Fire Hydrants.

(a) All fire hydrants shall be designed and manufactured to comply with the latest specifications of the American Water Works Association (AWWA). They shall be designed for 150 pounds working pressure. The hydrants shall be of simple design, easy to operate, effectively and positively drained and protected from damage by freezing, and convenient for repairing and replacing parts.

(b) Hydrants shall be equipped with one 4½-inch diameter pumper nozzle and two 2½ inch diameter hose connections, which shall have threads meeting the latest requirements of the State Fire Insurance Commission. Hydrants shall have a safety flange on the barrel and coupling on the valve stem, to prevent damage to barrel and stem in case of traffic accident. Hydrants shall be Mueller Company's centurian traffic model, M & H Style 129 traffic model, or American Darling Model B62B, or U.S. Pipe Manufacturer's Sentinel model or East Jordan Iron Works 5CD250, or equivalent as determined by the public works director.

(c) The construction to the main line shall be with mechanical joint locked hydrant tee equal to American Cast Iron Pipe Company A-10180. The connection at the base of the hydrant shall be mechanical joint with ductile iron retainer gland, for Class 150, centrifugally cast, 6 inch cast iron pipe. The valve opening shall meet the requirements of the AWWA Specifications for 4½ inch hydrant. The valve, valve seat and inner working parts shall be easily accessible. The depth from the surface of the ground to the bottom of the connecting pipe shall be 36 inches. The distance from the ground to the hose nozzle shall not be less than 24 inches. Each hydrant shall be neatly painted with a red reflective paint.

(d) Each hydrant shall be tested to 150 psi. The first test shall be made with the valve closed. The second test shall be made with the main valve open but all nozzles closed. While this test is being carried on, the hydrant shall be subjected to a hammer test. Any hydrant showing defects by leakage, sweating or otherwise shall be rejected. The barrel and all parts shall withstand these tests. These tests shall be made in the field after the hydrants are installed.

Sec. 21-91. Tapping Saddles.

Saddles shall be either Smith Blair 313 or 311, Dresser Style 194, or Clow Style #3407 for A.C. and D.I.P. and Style 3401 for P.V.C.

Sec. 21-92. Mechanical Joint Plugs.

Mechanical joint plugs shall be similar and equal to F-1035 by the Clow Corporation.

Sec. 21-93. Pipe Connection Couplings.

Pipe connections between new pipe and existing pipe shall be made with Dresser Style 90 long steel couplings for pipe sizes 2 inches and below; for pipe sizes above 2 inches use M.J. solid sleeves.

Sec. 21-94. Curb Stops.

All metal parts of curb stops shall be made of bronze. The stops shall be Ford B23-332 or Mueller padlock wings for flared copper service pipe. The cock shall be operated with a combined cap and tee and shall open when turned counter-clock wise.

Sec. 21-95. Corporation Cocks.

Corporation cocks shall have threaded inlet and outlet connection for flared copper service pipe. All metal parts of the cock assembly shall be made of bronze. The cock shall be operated with a tee head and shall open when turned counter-clockwise. The cock shall be a Mueller H-15000, a Hayes 5200, a Ford F600, or approved equal.

Sec. 21-96. P.V.C. Casing Pipe.

P.V.C. casing pipe shall be used for long-side services and the type shall be Schedule 40.

Sec. 21-97. Meter Boxes (5/8-inch by ¾-inch).

Meter boxes shall be plastic boxes with cast iron lids.

Sec. 21-98. Tapping Valves.

Tapping valves shall be Mueller, M.J. Type, 200 psi, H-665, or equal.

Sec. 21-99. Tapping Sleeves (Tees).

Tapping tees shall be Mueller, M.J. Type, 200 psi, H-616 or equal, for pipe size as shown.

[Secs. 21-100 to 21-110 Reserved].

Division VI. Public Sewerage System.

Sec. 21-111. Restrictions on Sewers.

Sewers shall be designed as separate sanitary sewers only in which rainwater from roofs, streets, and other areas and groundwater from foundation drains are excluded. Overflows from sewers shall not be permitted.

Sec. 21-112. Design Period.

Sewer systems should be designed for the estimated ultimate tributary population. Tributary population is considered to be all areas upstream of the discharge point of the system being designed. Sewers will be designed and installed to the uppermost property line of the development being served. Consideration should be given to the maximum anticipated capacity of institutions, industrial parks, etc.

Sec. 21-113. Design Factors.

(a) In determining the required capacities of sanitary sewers, the following factors should be considered: maximum hourly sewage flow; additional maximum sewage or waste flow from industrial plants; ground water infiltration; topography of the area; and depth of excavation.

(b) New sewer systems shall be designed on the basis of an average daily flow of sewage of not less than 400 gallons per household per day. Sewers should be designed to carry the per capita flow when flowing one-half full. Normally, all sewers shall be designed with a peaking factor of not less than 2½ and this may be increased upon the direction of the reviewing engineer. When deviation from the foregoing per capita rates is demonstrated, a description of the procedure used for design shall be included.

Sec. 21-114. Minimum Pipe Size.

No sewer shall be less than 8 inches after leaving the uppermost property line to be served.

Sec. 21-115. Depth.

(a) Any sewers installed in the street shall be sufficiently deep to provide 5 feet of cover at the inlet end of all service laterals at the street right-of-way, and over any part of the main or service within the street right-of-way.

(b) Any sewers on off street easements shall have a minimum of 3 feet of cover unless cast iron or ductile iron pipe is used. Filling over the pipe to obtain minimum cover is not allowed if the fill will impede the natural flow of surface water or will cause an erosion problem.

Sec. 21-116. Slope.

(a) All sewers shall be so designed and constructed to give mean velocities, when flowing full, of not less than two feet per second based on Kutter's formula using an "N" value of 0.013. The following are the minimum slopes which should be provided; however, slopes greater than these are desirable. These minimum slopes will be used only when sufficient flows are expected to maintain a velocity of two feet per second and maintain a cleaning action in the line.

Minimum Slope of Sewer by Size
(Slope in feet per 100 feet)

Sewer Size	Minimum Slope*	Sewer Size	Minimum Slope*
8 inch	0.40	18 inch	0.12
10 inch	0.29	21 inch	0.10
12 inch	0.22	24 inch	0.08
14 inch	0.17	27 inch	0.07
15 inch	0.15	30 inch	0.06
16 inch	0.14	36 inch	0.05

(b) Sewers shall be laid with uniform slope between manholes.

(c) Sewers on 20% slope or greater shall be cast iron or ductile iron pipe and shall be anchored securely with concrete anchors to prevent displacement by erosion or shock.

(d) Maximum slope of sewers shall be 30% and sewers shall be designed at less than 20% whenever possible.

Sec. 21-117. Connection of Different Size Pipes.

When a small sewer is connected to a large one, the connection shall not be lower than matching the 0.8 depth point of both sewers to the same elevation. For example, when connecting an 8 inch pipe to a 60 inch pipe a point 6.4 inches above the invert of the 8 inch pipe shall not be lower than a point 48 inches above the invert of the 60 inch pipe.

Sec. 21-118. Gravity Sewer Pipe.

All sanitary sewer pipe up through 15 inch diameter must be Polyvinyl Chloride (PVC), Ductile Iron Pipe (DIP), or Steel Pipe, except where DIP or Steel Pipe is designated. For 18 inch diameter pipe and above, the contractor may have the option of using either High Density Polyethylene (H.D.P.E.), Polyvinyl Chloride (P.V.C.), Reinforced Concrete Pipe (R.C.P.), Ductile Iron Pipe or Steel Pipe, except where Ductile Iron Pipe (DIP) or Steel Pipe is specifically shown on the plans. All pipe shall be constructed with a minimum Class "C" bedding.

Sec. 21-119. Ductile Iron Pipe (DIP) – Scope.

(a) Ductile iron sewer pipe shall be required at all utility crossings with less than 2 feet of clearance, in cross country locations where cover is less than 3 feet, in streets where cover is less than 5 feet, in fills, and where PVC sewer pipe has more than 18 feet of cover.

(b) Ductile Iron Pipe shall be designed in accordance with ANSI Specification A21.50-81. The thickness and class of the pipe shall be governed by ANSI Specification A21.50-81.

(c) Pipe shall be manufactured in accordance with ANSI Specification A21.51-81 latest revision.

(d) Pipe shall be coal tar epoxy lined and seal coated with approved bituminous seal coat in accordance with AWWA C151, latest revision. Coal tar epoxy lining shall adhere to the specifications of this Division.

Sec. 21-120. Ductile Iron Pipe – Materials.

(a) The lining material for ductile iron pipe and fittings shall be Koppers Bitumastic No. 300-M coat tar epoxy, Sikagard 62 or approved equal. Two coats of different colors, each 8 to 10 dry mils thick shall be applied in accordance with the manufacturer's recommendations to obtain a minimum dry film thickness of 16 to 20 mils. Each pipe joint shall be marked with the date the coating was applied and its numerical sequence of application on that date. A permanent marker of identifiable color shall be used. The coating shall be allowed to cure for a minimum of 5 days at temperatures of 70°F to 100°F before pipe installation. The contractor shall submit test reports verifying the dry film thickness and the thoroughness of the coating.

(b) Each joint shall be thoroughly sealed with the epoxy coating material during installation to provide a continuous coating throughout the pipe and allowed to cure.

Sec. 21-121. Ductile Iron Pipe (DIP) – Joints.

DIP joints shall be of the bell and spigot type with push-on joints, conforming to ANSI Specification A21.11 or mechanical joints.

Sec. 21-122. Polyvinyl Chloride (PVC) Sewer Pipe – Scope.

The contractor shall provide unplasticized polyvinyl chloride (PVC) plastic gravity sewer pipe meeting the requirements of ASTM D3034 (latest revision) in the sizes shown unless otherwise indicated on the contract documents.

Sec. 21-123. Polyvinyl Chloride (PVC) Sewer Pipe – Materials.

Pipe and fittings shall meet the requirements as specified under ASTM D3034 (latest revision) for pipe through 15 inches and ASTM F679 for pipe 18 inches through 27 inches. All pipe and fittings shall be suitable for use as a gravity sewer conduit. Bell joints shall consist of an integral wall section with elastomeric gasket joint that provides a watertight seal. Standard laying lengths shall be 20 feet (± one inch). The pipe shall be capable of passing all tests that are detailed in this specification.

Sec. 21-124. Polyvinyl Chloride (PVC) Sewer Pipe – Minimum Wall Thickness.

Minimum wall thickness shall be as provided in the following table:

Thickness of PVC Sewer Pipe Wall

Pipe Size	Minimum Wall Thickness	Pipe Size	Minimum Wall Thickness
4 inch	0.120 inches	15 inch	0.437 inches
6 inch	0.180 inches	18 inch	0.536 inches
8 inch	0.240 inches	21 inch	0.632 inches
10 inch	0.300 inches	24 inch	0.711 inches
12 inch	0.360 inches	27 inch	0.801 inches

Sec. 21-125. Polyvinyl Chloride (PVC) Sewer Pipe – Fittings.

All fittings and accessories shall be manufactured and furnished by the pipe supplier. They shall have bell and/or spigot configurations compatible with that of the pipe and shall have an equivalent wall thickness.

Sec. 21-126. Polyvinyl Chloride (PVC) Sewer Pipe – Pipe and Fittings Test.

The contractor will be required to furnish a written outline of the manufacturer's quality control program for the Engineer's approval prior to shipping any pipe to the project. Before installing any pipe the contractor shall furnish written certification that all pipe through 15 inches meets ASTM Specification D3034 and for 18 inches through 27 inches must meet ASTM F679. At least one sample from each 100 pieces of pipe furnished shall be subjected to each test outlined under Section 8 of ASTM D3034. The samples will be tested by an independent laboratory approved by the Engineer, and a certified copy of results will be furnished to the Engineer. If any test is not met then 9 additional tests of that property will be ordered, and if any of these 9 tests are not met, the manufacturer will not be allowed to furnish materials for this project. The cost of all testing shall be included in the contractor's bid proposal and no pipe shall be installed until the testing is complete and approved by the Engineer.

Sec. 21-127. Polyvinyl Chloride (PVC) Sewer Pipe – Pipe Stiffness.

Minimum "pipe stiffness" (F/Y) at 5% deflection shall be 46 psi for all sizes, when tested in accordance with ASTM Standard Method of Test D2412 (latest edition), to determine the "External Loading Properties of Plastic Pipe by Parallel Plat Loading." There shall be no evidence of splitting, cracking, or breaking at a deflection of up to 30% of the original diameter.

Sec. 21-128. Polyvinyl Chloride (PVC) Sewer Pipe – Fusion Quality.

There shall be no evidence of flaking, swelling, or disintegration when the pipe material is tested in accordance with ASTM D2152, "Quality of Extruded Poly (Vinyl Chloride) pipe by Acetone Immersion."

Sec. 21-129. Polyvinyl Chloride (PVC) Sewer Pipe – Joint Tightness.

Pipe and fitting joints shall comply with ASTM D3212 (latest edition) for "Joints for drain and Sewer Plastic Pipes Using Flexible Elastomeric Seals." Joint assemblies shall not leak when subjected to both an internal and external hydrostatic test at equivalent pressures of 10.8 psi gauge for a period of one hour. Pipes shall be tested in straight alignment, axially deflected position, and by shear load test as otherwise defined in paragraphs 7.2, 7.3, and 7.4 of ASTM D3212.

Sec. 21-130. Polyvinyl Chloride (PVC) Sewer Pipe – Installation.

(a) PVC pipe will be installed in accordance with ASTM D2321 (latest revision).

(b) In any area where the pipe is below existing ground water level, the contractor will embed PVC pipe in sand or graded gravel. No special compaction requirements will be necessary; however, the sand or gravel must extend from 6 inches below the pipe to 12 inches above the pipe, and the material must be firmly placed under the pipe haunches.

(c) When embedding PVC pipe in friable, compressible soils (e.g., silt, clay, sandy clay, silty clays, etc.), special care must be exercised to provide a uniform (undisturbed or fully compacted) trench bottom. Additionally, the backfill must be compacted to ninety-five percent (95%) standard proctor in 6 to 8 inch lifts to 12 inches above the top of the pipe. Initial backfill shall be compacted to the densities outlined in D2321. The engineer may require up to 10 random compaction tests to insure compliance with D2321.

(d) If any material tested is less than the required density, the contractor shall re-compact said material at no additional cost to the owner, and the engineer shall then have the right to additional compaction tests at the expense of the contractor to insure compliance with D2321.

(e) The contractor shall use SDR-35, for pipe with 0 to 20 feet of fill. PVC pipe cannot be used with more than 20 feet of fill.

Sec. 21-131. Polyvinyl Chloride (PVC) Sewer Pipe – Deflection Limit.

(a) Vertical deflection of installed pipe shall not exceed 7½% of the undeflected diameter as defined in Table X1.1 of ASTM D3034.

(b) Each segment of line (except service lines) will be tested at the end of each month just prior to submitting for payment on that segment. Upon completion of the pipe laying, and at least 30 days after installation (to allow for settling), the pipe will be tested again for final acceptance. The test shall be performed by the contractor pulling a mandrel of specified dimensions through the pipeline.

Sec. 21-132. Polyethylene pipe (H.D.P.E.) – Scope.

This specification covers the requirements of high density polyethylene profile wall gravity sewer and drain pipe fittings in nominal sizes 18 inches through 96 inches with integral bell and spigot gasketed and welded joints.

Sec. 21-133. Polyethylene pipe (H.D.P.E.) – Class.

Class selection for high density polyethylene profile wall sewer pipe shall be a minimum of Class 160 for pipe with 0 to 20 feet of fill. Polyethylene pipe cannot be used over 20 feet deep.

Sec. 21-134. Polyethylene pipe (H.D.P.E.) – Material.

Pipes and fittings shall be manufactured from high density polyethylene resin compound which shall meet the requirements of Type III, Class C, Category 5, Grade P 34 per ASTM D 1248. Materials meeting the requirements of ASTM D3350 with a cell classification PE 334433C or higher are also suitable. The pipe shall contain a minimum of two percent carbon black as an ultraviolet inhibitor.

Sec. 21-135. Polyethylene pipe (H.D.P.E.) – Pipe Dimensions.

The average inside diameter and the minimum wall thickness of the waterway of the pipe shall comply with ASTM F894 for RSC Class 160 pipe.

Sec. 21-136. Polyethylene pipe (H.D.P.E.) – Joints.

The pipe shall be produced with bell and spigot end construction. Joining shall be accomplished by use of neoprene rubber gaskets complying with the physical requirements as specified in ASTM F477. Joints shall be in accordance with ASTM D3212 and withstand an internal operating pressure of 50 psi.

Sec. 21-137. Polyethylene pipe (H.D.P.E.) – Pipe Stiffness.

The profile wall shall be substantially strong to protect against any diametrical deformation. All polyethylene profile wall pipe shall have a minimum specific pipe stiffness of 46 psi at a deflection of five percent (5%) of the internal diameter when tested and calculated in accordance with ASTM D24212 (latest edition).

Sec. 21-138. Polyethylene pipe (H.D.P.E.) – Retest and Rejection.

(a) If the results of any tests do not meet the requirements of this specification, the tests may be conducted again in accordance with agreement between purchaser and seller.

(b) In retesting, the product requirements of this specification shall be met and the test methods designated in this specification shall be followed. If upon retest failure occurs, the quantity of product represented by the tests shall be rejected.

Sec. 21-139. Polyethylene pipe (H.D.P.E.) – Deflection Limit.

(a) Vertical deflection of installed pipe shall not exceed 7½% of the undeflected diameter as defined in Table X1.1 of ASTM D3034.

(b) Each segment of line (except service lines) will be tested at the end of each month just prior to submitting for payment on that segment. Upon completion of the pipe laying, and at least 30 days after installation (to allow for settling), the pipe will be tested again for final acceptance. The test shall be performed by the contractor pulling a mandrel of specified dimensions through the pipeline.

Sec. 21-140. Reinforced Concrete Pipe (R.C.P.) – Scope.

The work included in this section and related sections includes furnishing all labor, equipment, and materials required to install, test, and inspect reinforced concrete (ASTM C-76) pipe sewers, including all risers, plugs, fittings, and bedding, as shown on the drawings and/or specified herein.

Sec. 21-141. Reinforced Concrete Pipe (R.C.P.) – Quality Assurance.

The contractor must submit to the owner and engineer the concrete pipe manufacturer's evidence of a working Quality Control Program for approval, prior to any pipe being manufactured. The program and standards of manufacturing must be established and well defined. The program must include the minimum following requirements:

(a) A full time Quality Control Technician.

(b) A complete and working Quality Control Laboratory capable of testing and recording the requirements set forth in these Specifications for concrete pipe.

(c) Written documentation of the concrete pipe manufacturer's performance on a recent sewer project. The performance results must be from a tested and approved installation of the pipe material set forth in this specification from either the Owner and/or Engineer stating that the pipe tested and met the requirements.

(d) A zero defect program for daily material testing and finished product testing to assure quality control as the pipe is being manufactured and shipped for this particular project.

(e) Provide the services of a competent factory representative of the pipe manufacturer for purposes of supervising and/or inspecting the installation of pipe. This service shall be for the duration of the project.

(f) Provide equipment and labor to air test each joint of pipe (30" diameter and larger) as it is installed. Joint tester shall be "Cherne Large Diameter Joint Tester" or equal. This testing shall in no way relieve the contractor from the responsibility of performing infiltration/exfiltration tests.

Sec. 21-142. Reinforced Concrete Pipe (R.C.P.) – Testing.

(a) Concrete gravity pipe (ASTM C-76) used on this Project shall meet all materials and testing requirements of ASTM C-76, ASTM C-443, and ASTM C-497 (except where modified herein). Manufacturer shall secure the services of an independent testing laboratory to conduct the tests. Testing laboratory shall be approved by the Engineer prior to conducting any tests. All testing costs shall be paid for by the pipe manufacturer.

(b) Testing shall be in Job Lots (a Job Lot is a continuous run of one size of pipe for this project) for a maximum of 6% of pipe quantity or a minimum of 5% of pipe quantity. The test specimen will have a minimum of two joints for pipe of 16 foot laying length. For pipe of 12 foot laying length, the maximum number of joints shall be 7 and the minimum number shall be two. Bulkheads will be included in this joint count.

(c) A representative of the Owner will be present to witness all tests that are conducted at the manufacturer's site and shall record all results. Manufacturer shall notify the Engineer at least 48 hours prior to conducting any tests.

(d) The following test shall be required: Pipe barrels shall be subjected to an internal hydrostatic pressure of 10 psi for 10 minutes. Pipe joints shall be subjected to an internal hydrostatic pressure of 13 psi for 10 minutes. The testing of the joints will be in the straight and deflected alignment. The manufacturer shall conduct three external load crushing strength tests per Job Lot. This test shall be by the three-edge bearing method. The test may be taken to Ultimate Load. Absorption tests shall be conducted as per ASTM C-497. The absorption rate of the sample from the pipe wall shall not exceed 6%.

(e) If any test specimen fails to pass any of the above tests, two additional test specimens shall be chosen at random from the job lot and tested. If either of those two specimens fails the test, then the entire job lot is subject to rejection. If the manufacturer requests further testing, then every section of pipe in the job lot must be tested.

(f) In addition to the above tests, manufacturer shall conduct tests to determine alkalinity of cover concrete as detailed in this Section.

(g) Each pipe shall be clearly marked as required by the governing ASTM standard specifications to show its class, date of manufacture, and the name of trademark of the manufacturer.

(h) Any pipe or specials which have been broken, cracked or otherwise damaged before or after delivery or which have failed to meet the required tests, shall be removed from the site of the work and shall not be used therein.

Sec. 21-143. Reinforced Concrete Pipe (R.C.P.) – Guarantee.

The contractor shall provide a guarantee against defective materials and workmanship.

Sec. 21-144. Reinforced Concrete Pipe (R.C.P.) – Materials.

(a) All concrete pipe and fittings 12 inches in diameter and larger shall be reinforced concrete sewer pipe conforming to the latest requirements of ASTM C-76 with the following modifications: All concrete pipe with 0 to 20 feet of fill shall be a minimum of Class III with 4500 psi concrete. All pipe with 20 to 30 feet of fill shall be Class IV with 4500 psi concrete. All pipe with 30 feet of fill and over shall be Class V with 5500 psi concrete.

(b) Pipe shall have circumferential reinforcement as required for the particular class of pipe furnished. The bell and spigot of the joint shall contain circumferential and longitudinal reinforcement. Reinforced concrete pipe shall be centrifugally cast or vibrated, horizontally or vertically cast or made on a Packerhead machine and shall be furnished in lengths not more than 20 feet and not less than 8 feet, except where short lengths are required for construction conditions. Reinforced concrete pipe shall have bell and spigot joints suitable for the use of a rubber gasket to be provided as a part of this item.

(c) Concrete pipe for sanitary sewers shall have bell and spigot joints consisting of self-centering steel joint rings securely attached to the pipe reinforcing steel. The steel joint rings shall be suitable for use with a rubber O-ring type gasket to be provided as part of this item.

(d) Bell and spigot joints consisting of self-centering steel joint rings shall have the joint rings securely attached to the pipe reinforcing steel. The rings which form the joint shall be made so that they will join with a close, sliding fit. The joint surfaces shall be such that the rubber gasket shall be confined on all sides and shall not support the weight of

the pipe. The spigot ring shall have an external groove accurately sized to receive the gasket. Special section steel for spigot rings shall conform to ASTM A-283, Grade A, or ASTM A-306, Grade 50. The bell ring shall be flared to permit gradual deformation of the gasket when the joint is assembled. Minimum thickness of bell rings shall be s (3/16”). Bell rings ¼ inch or thicker shall conform to ASTM A-283, Grade A, or ASTM A-306, Grade 50. Bells less than ¼ inch thick shall conform to ASTM A-570, Grade A. Each ring shall be precisely sized by expansion beyond the elastic limit of the steel and then gauged on an accurate template. All exposed surfaces of both rings shall be protected by a corrosion-resistant coating of zinc applied by an approved metallizing process after proper cleaning.

Sec. 21-145. Reinforced Concrete Pipe (R.C.P.) – Lining.

(a) The coal tar epoxy system shall be Koppers 300 M, Porter Tarset, Wise Chem CTE 200, Amercoat 78, Protecto 101 or equal.

(b) The interior concrete or mortar surfaces of pipe and fittings are to be sandblasted and painted with one coat of a high-build, coal tar epoxy system or two coats of a standard coal tar epoxy system. The dry film thickness of the total system shall be 16 mils minimum on concrete or mortar surfaces and on steel joint ring surfaces.

(c) Sandblasting shall result in a clean dry surface free of oil, grease, or other contaminants. Any air pockets over ¼ inch in diameter and ⅛ inch deep appearing on the concrete surface after sandblasting will be filled with an epoxy sand patching material such as those sold by Sherwin-Williams, Glidden, or Moran. The epoxy sand patch should be troweled prior to the application of the coal tar epoxy.

(d) Any steel surfaces to be painted should be sandblasted, solvent cleaned, or wire brushed prior to painting. Application of the coal tar epoxy shall be by brush, roller, or spray system using equipment recommended by the manufacturer of the coal tar epoxy system. The temperature during application and curing of coal tar epoxy shall be as recommended by the manufacturer of the coal tar epoxy. Time between coats (if applicable) shall be as recommended by the manufacturer of the coal tar epoxy.

(e) If the inside joint recess will be mortared and painted with coal tar epoxy in the field, the pipe supplier shall not paint the inside vertical surfaces at the ends of the pipe. When the inside joints will not be mortared in the field, the pipe supplier shall paint the inside vertical concrete or mortar surfaces at each end of the pipe.

(f) The paint shall be extended continuously over the front lip of the steel spigot ring and a minimum of 2 inches onto the sealing surface of unrestrained bell rings so that all interior joint surfaces which can be exposed to the fluid inside the pipe are coated.

Sec. 21-146. Steel Pipe.

Steel pipe shall meet the requirements of ASTM A-139 Grade B, AWWA C-200-75 and shall be coal tar lined 3/32 inch in accordance with AWWA C-203-75. The outer coating shall be sand/grit blasted, primed to Federal Specification TTP-86C. Pipe shall have a minimum wall thickness of 0.250 inches.

Sec. 21-147. Precast Concrete Manholes.

(a) **Manholes.** Precast concrete manholes shall consist of precast reinforced concrete sections with eccentric, (or flat slab for shallow manholes) top section and a base section conforming with the typical manhole details as shown on the Standard Detail Drawings.

(b) **Manhole sections.** Precast manhole sections shall be manufactured, tested, and marked in accordance with the latest provisions of ASTM Standard Specifications, Serial Designation C 478.

(c) **Manhole section joints.** Joints of the manhole sections shall be of the tongue-and-groove type, sections shall be joined using O-ring rubber gaskets, flexible plastic gaskets conforming to the applicable provisions of ASTM Standard Specification, Serial Designation C 433, latest revision, or an approved bituminous mastic joint material.

(d) **Lift holes.** Each section of the precast manhole shall have not more than two holes for the purpose of handling and laying. These holes shall be sealed with cement mortar using 1 part Portland cement to two parts clean sand, meeting ASTM Standard Specifications, Serial Designation C 144, latest revision.

(e) **Manhole steps.** Manhole steps conforming to the applicable provisions of ASTM Specification C 478, latest edition, shall be of #4 steel reinforcing bars covered with Polypropylene Plastic or rubber and shall be supplied with depth rings and other necessary appurtenances. Steps shall be similar to and of an equal quality to the "PS1-PF" by M. A. Industries, Inc. of Peachtree City, Georgia. The step shall be factory built into the precast sections. See the standard details for a typical manhole step detail.

(f) **Pipe holes.** Holes in precast bases to receive sewer pipe shall be precast at the factory at the required locations and heights. Knocking out of holes in the field will not be permitted, however, holes can be cored in the field with a coring machine. All manholes shall have Kor-N-Seal (or equal) rubber boots for all pipe entries/exits.

(g) **Bases and inverts.** Manhole bases and inverts shall be constructed of 2,500 psi concrete in accordance with details on Standard Detail Drawings and the trough shall have the same cross-section as the sewers which it connects. The manhole base and invert shall be carefully formed to the required size and grade by gradual and even changes in sections. Changes in direction of flow through the sewer shall be made to a true curve with as large

a radius as the size of the manhole will permit. The minimum drop through a manhole shall be 0.1 foot.

(h) **Manhole foundation.** The manhole base shall be set upon a 6 inch (minimum thickness) mat of #57 crushed stone.

(i) **Brick.** Brickwork required to complete the precast concrete manhole shall be constructed using one part Portland cement to two parts clean sand, meeting ASTM Specifications, Serial Designation C 144, thoroughly mixed to a workable plastic mixture. Brickwork shall be constructed in a neat and workmanlike manner. Cement mortar shall be used to grout interior exposed brick joints and faces. No more than three courses of brick with 9 inch maximum total depth of bricks may be used to adjust manhole covers.

(j) **Frame and cover.** The cast iron frame for the manhole cover shall be set at the required elevation and properly anchored to the masonry. Frames and covers shall be Neenah R-1776 or equal in compliance with the latest edition of ASTM 48. Where manholes are constructed in paved areas, the top surface of the frame and cover shall be tilted, if necessary, to conform to the exact slope, crown and grade of the existing adjacent pavement. In areas where manhole tops may be submerged by street runoff or high flood waters, the manhole lid shall be "self-sealing." All covers shall have sewer printed on them.

(k) **Masonry work.** Masonry work shall be allowed to set for a period of not less than 24 hours. All loose or waste material shall be removed from the interior of the manhole. The manhole cover then shall be placed and the surface in the vicinity of the work cleaned off and left in a neat and orderly condition.

(l) **Location.** Manholes shall be installed at the end of each line; all changes in grade, size, or alignment; at all intersections; and at distances normally not greater than 350 feet. Spacings for 8 inch sewers can be more than 350 feet but not more than 400 feet and will be allowed only in isolated cases when, in the opinion of the reviewing engineer, it is impractical to install an additional manhole and when the extra distance will not impede maintenance of the line. Manhole spacing in sewers 10 inches and larger will conform to Ten State Standards. In no circumstance will a spacing of greater than 300 feet be allowed when the slope exceeds 10%. Cleanouts may be used only for special conditions and shall not be substituted for manholes nor installed at the ends of laterals greater than 150 feet in length. Manholes in cross-country areas shall be elevated so that the top is 18 inches above ground.

(m) **Drop manholes.** A drop pipe shall be provided for a sewer entering a manhole at an elevation of more than two feet above the manhole invert. The drop pipe shall be of ductile iron materials. All outside 90 degree elbows shall have thrust block poured below the elbow. Outside Drop Manhole will be noted on the construction plans at any time the drop exceeds two feet. Where the difference in elevation between the incoming sewer and the manhole invert is less than two feet, the invert shall be sloped to prevent solids deposition.

Sec. 21-148. Casings.

(a) Steel casing pipe shall be used for all cased piping where the carrier pipe is 8 inches or greater in size.

(b) Steel casing pipe shall have a minimum yield strength of 35,000 psi and shall conform to the requirements of ASTM A139. It shall be fully coated on the exterior and interior with a coal tar coating. The casing pipe diameter shall be six to eight inches greater than the "bell" diameter of the carrier pipe. Minimum wall thickness shall be as shown on the following table:

Thickness of Steel Sewer Pipe Wall

Nominal Diameter	Minimum Nominal Wall Thickness	Nominal Diameter	Minimum Nominal Wall Thickness
Under 14	0.188 inches	28 inch	0.406 inches
14 inch	0.219 inches	30 inch	0.406 inches
16 inch	0.219 inches	32 inch	0.438 inches
18 inch	0.250 inches	34 inch	0.469 inches
20 inch	0.281 inches	36 inch	0.469 inches
22 inch	0.312 inches	42 inch	0.500 inches
24 inch	0.344 inches	48 inch	0.625 inches
26 inch	0.375 inches	54 inch	0.750 inches

[Secs. 21-149 and 21-150 Reserved].

Division VII. Wastewater Treatment Facilities.

Sec. 21-151. State Rules.

Wastewater treatment facilities must comply with all rules contained in the "Rules and Regulations for Water Quality Control" of the Georgia Department of Natural Resources, Chapter 391-3-6 latest edition, as amended from time to time.

Sec. 21-152. Local Design Modifications.

The public works director of the City of Powder Springs shall have the right to review and modify facility designs if these modifications are in the interest of the City.

Sec. 21-153. Local Inspection and Approval.

The public works director and/or his designated representative of the City of Powder Springs shall have the right to review and inspect all construction and may reject any work that does not meet quality control standards.

Sec. 21-154. Acceptance for Operation.

After completion of construction, the City will provisionally accept the project for operation subject to the requirements for maintenance as provided in these specifications.

Sec. 21-155. Operation and Maintenance Manual.

The developer shall submit 6 copies of an approved operations and maintenance manual for the facility to the City of Powder Springs.

Sec. 21-156. Maintenance and Payment Bonds.

The developer shall post a maintenance bond on the facility for a 2 year period after completion and acceptance of the facility by the City of Powder Springs. In addition the developer shall post a payment bond on the facility for all subcontractor and material supplier work.

Sec. 21-157. Maintenance.

It shall be the developer's obligation to provide all maintenance for a two year period after acceptance of the project by the City of Powder Springs. At the end of the two year maintenance period the public works director and/or his designated representative of the City shall inspect the facility, and upon correction by the developer of all deficiencies noted by the public works director and/or his designated representative, the City will accept the facility for operation.

Sec. 21-158. Relocation of Existing Facility.

If a developer wishes the City to consider allowing the relocation of an existing wastewater treatment facility the following shall apply:

(a) All of the rules outlined in other sections of this division shall apply.

(b) The City or its consultant will inspect the facility that is proposed to be relocated and prepare a deficiency list, which must be corrected by the developer prior to acceptance of the facility by the City.

(c) All of the cost incurred by the City for the consultant's time will be borne by the developer as will the cost of correcting deficiencies noted per this section.

Sec. 21-159. Registered Professional Engineer Required.

All reports, plans and studies submitted to the City by the developer must carry the seal of a Professional Engineer competent in the design of sewerage treatment works in the State of Georgia.

[Sec. 21-160. Reserved].

Division VIII. Wastewater Lift Station Specifications.

Sec. 21-161. Lift Station Site Requirements.

(a) **Flooding.** Lift stations shall remain fully operational and accessible during the 25-year flood. All electrical controls shall be above the 100-year flood level. All motors and mechanical equipment shall be protected against physical damage from the 100-year flood.

(b) **Access road.** Access roads shall be paved with a 12 foot wide surface of either concrete (four inch thick with wire mesh) or asphalt (six inches Graded Aggregate Base, plus two inches Type E asphalt). Maximum grade shall be 20%.

(c) **Fencing.** Lift station sites shall be fenced with a minimum of 6 foot high chain link fencing topped with three strands of barbed wire. Access gates shall be a minimum of 15 feet in width. A paved area inside the fencing shall be provided to facilitate service vehicle access to the pumping station wet well and other facilities. A paved turn around area shall be provided whenever the access road length exceeds 200 feet or when the road grade exceeds 10%.

(d) **Screening.** Where natural screening is not present to screen the site from view of residences, special plantings shall be installed to screen the site.

(e) **Ground covers.** All ground areas inside the fence and extending 4 feet beyond the fence shall be treated with a herbicide and covered with a geotextile fabric, followed with a 4 inch thick layer of #57 stone. The geotextile fabric shall be a nonwoven polypropylene weighing 8 oz./S.Y. with a minimum burst strength of 250 psi, such as Amoco Type 4553 or equal.

(f) **Water supply.** A metered water supply line (¾ inch minimum size) shall be installed to the site, and a freeze-proof yard hydrant located near the wet well. The hydrant shall be equipped with a suitable backflow preventer (Watts No. NF8 or approved equal).

(g) **Lighting.** One pole-mounted, photo cell controlled, watt mercury vapor security light shall be installed. It shall be equipped with a manual on/off switch (located in the main control panel) to override the photocell control.

(h) **Ownership.** Both the lift station site and the access road right-of-way shall have ownership dedicated to the City, and this shall be indicated on the subdivision plat or development plan. The dedicated space for the lift station shall include sufficient space for parking of two trucks, plus turn-around, plus slope maintenance. The dedicated width on road right-of-way shall be 30 feet minimum.

Sec. 21-162. Pumps.

(a) Lift stations having less than 500 gpm capacity (per pump) shall utilize two submersible centrifugal pumps each having a capacity equal to the design flow.

(b) Lift stations having a capacity of 500 gpm or more shall be reviewed on an individual basis and may have requirements differing from those outlined in this division.

(c) Grinder type centrifugal pumps will be used for pumps of less than 100 gpm. Force mains shall be sized to provide a velocity of at least 2½ feet per second.

(d) The design shall allow for easy removal of any pump or equipment item without the need to shutdown the entire lift station.

(e) Manufacturers meeting approved standards include Flygt, Aurora, and Myers. Others meeting these standards may be approved. The City reserves the right to review each application on an individual basis.

(f) Lift stations with pumps up to 15 hp shall be supplied with a spare complete pump. Lift stations with pumps above 15 hp shall be supplied with an extra impeller and set of bearings plus a complete set of manufacturer's recommended spare parts.

Sec. 21-163. Pump Features.

Pumps shall have the following features:

(a) Non-clog impeller.

(b) Be capable of passing a 3 inch sphere (except grinder pumps).

(c) Be capable of running without being submersed.

(d) Have dual mechanical seals with seal leak indicator light in the control panel.

(e) Pump and motor casings shall be cast iron, and all fasteners shall be stainless steel.

(f) Motor shall be selected to be non-overloading under all operating conditions.

(g) Motor winding shall have a heat sensor with auto reset to prevent overheating; three-phase motors shall have two sensors.

(h) Operating speed of the pump shall not exceed 1,800 rpm without special approval.

(i) Motor shall have upper and lower roller bearings.

(j) The pump shall be automatically connected to the discharge connection elbow when lowered into place, and shall be easily removed for inspection or service. There shall be no need for personnel to enter pump well. Sealing of the pumping unit to the discharge connection elbow shall be accomplished by a simple linear downward motion of the pump. Each pump shall be equipped with a chain (of aluminum or other non-corrosive material) for easy removal.

Sec. 21-164. Design Features.

(a) **Wet well volume**. The wet well volume shall be sized to limit pump cycles to no more than 6 cycles per hour under worst conditions.

(b) **Ventilation.** For wet wells, the minimum requirement shall be 2 gravity vent pipes designed for natural ventilation. Where conditions are conducive to formation of hazardous conditions (in the design engineer's opinion) then mechanical ventilation shall be provided. For dry wells, mechanical ventilation shall be required.

(c) **Submersible lift stations.** Submersible lift stations shall have a wet well structure and a separate valve pit. Both structures shall be precast concrete with a monolithic base. The valve pit shall be 4 feet by 4 feet by 5 feet deep with manhole steps, floor drain pipe, and a 3 foot by 3 foot aluminum access hatch. Wet wells may be either round or rectangular and shall have a diameter or width of at least 4 feet. Wet wells shall be sized to meet cycle time requirements with a drawdown (i.e., the distance between high water level and low water level) of not more than three feet. The wet well shall have an aluminum hatch large enough for easy removal of pumps.

(d) **Riser sections.** Riser sections in precast units shall be sealed watertight using butyl rubber sealant or other approved sealant. Mastic shall not be used. Structures shall be adequately reinforced for all loading conditions normally encountered during shipping, construction and service. All openings (for pipes, hatch, conduits) shall be either cast in place or neatly cut. Sewer pipe connections shall utilize rubber boot connectors, and be watertight. The wet well shall be equipped with an aluminum ladder.

(e) **Accessories.** All materials inside the wet well and valve pit shall be corrosion resistant. Mechanical equipment requiring ferrous metals shall have a coal tar epoxy coating. Guide rails for pumps shall be stainless steel. Miscellaneous metals including fasteners shall be aluminum or stainless steel; anchor bolts shall be stainless steel.

(f) **Pressure gauge.** A pressure gage shall be installed on the force main downstream of the gate valves, inside the valve pit and visible from ground level. A corporation stop shall be installed on the tap to allow removal of the gauge.

(g) **Valves.** The discharge pipe of each pump shall have a check valve followed by a gate valve before the two pipes join into a common force main.

Sec. 21-165. Force Main.

(a) The force main shall be sized for a minimum velocity of 2½ feet per second with one pump operating.

(b) Force mains of 4-inch diameter or larger shall be ductile iron pipe. Smaller force mains may be used only with grinder pumps and shall be PVC pipe, SDR-21 with gasket joints. PVC pipe shall not be exposed to sunlight or freezing temperatures. Buried PVC pipe shall be marked continuously with metallized locator tape.

(c) The force main profile shall slope continuously upward where practical. If high points occur where air could be trapped in the pipe, then an air release valve (of the type made for sewage applications) will be installed (in a manhole) at the high points.

Sec. 21-166. Electrical.

(a) Lift station controls and electrical components shall be factory-wired in completely weather proof stainless steel metal cabinets (NEMA 4X stainless steel). The cabinet shall be provided with condensate heaters and spare fuses of each type that is used in the electrical/control system.

(b) A main circuit breaker shall be installed to disconnect power to the entire station.

(c) Three phase power will be provided for all motors exceeding 5 hp. Phase converters will not be allowed.

(d) Protection against voltage surge and loss of a phase shall be provided.

(e) The factory-wired panel shall be equipped with a ground bus and neutral bus. Terminal shall be suitable for either aluminum or copper wire. All internal panel wiring shall be copper.

(f) Motors shall be suitable for either 230 volt or 460 volt operation.

(g) Wet well level shall be controlled by 4 sealed mercury tube float switches. All floats shall be provided with 25 feet of Type SJO flexible cord and shall be attached to a bracket mounted at the top of the wet well.

Sec. 21-167. Pump Control System.

The pump control system shall include the following features:

(a) Lead pump/lag pump alternator.

(b) Alarm light and horn to indicate high water level.

(c) Seal failure indicating light.

(d) Pump failure indicating light.

(e) Condensate heater.

(f) Lead pump selector switch.

(g) H-O-A switch and run light for each pump.

(h) Control voltage shall be 120v. Wiring shall be neatly tied and number coded to facilitate maintenance. A schematic diagram shall be furnished with the panel.

(i) 120v GFCI-type receptacle.

Sec. 21-168. Permanent, In-place Generator.

The need for providing a permanent in-place generator will be determined on the basis of storage time in the sewers leading to the pump station. If the storage time is less than 12 hours then a permanent standby generator must be installed. If storage time equals 12 hours or more only a transfer switch and provisions for connecting to a portable generator will be required. Where required, emergency power will be supplied by an on-site emergency generator. The generator shall be diesel powered with an automatic transfer switch and provisions for an automatic exercise cycle. Specifications for the generator shall be provided by the City.

The following rules shall apply:

(a) Storage volume available shall be taken as the volume between the low water level in the wet well and the elevation at which overflow would first occur (this might be the top of the wet well or that upstream manhole having the lowest top elevation). Volume of the wet well, manholes and sewer mains will be counted.

(b) The rate of sewage inflow for these computations shall be taken as 150 gallons per day per residential unit. Systems serving other than residential customers will be considered individually.

(c) Height of manholes shall not be extended above normal for the purpose of meeting this rule. The design shall ensure overflow before backing sewage into a dwelling or other building.

Sec. 21-169. Stand-by Power.

The minimum requirement for standby power for lift stations shall be that each station that does not have a permanent in-place generator shall have installed a manual transfer switch and receptacle for quick connection of a portable generator.

Sec. 21-170. Construction Plan Submission Requirements.

Submittal of construction plans shall include the following lift station information:

(a) Capacity calculations. Use one gpm capacity per house on residential developments of less than 200, except that the minimum pump capacity shall be 30 gpm.

(b) System head calculations; tabulated and plotted on the pump curve. Include a plot of force main velocity.

(c) Standard drawings, details and specifications sufficient to ascertain compliance with the requirements of this division.

(d) Calculations showing determination of wet well volume and cycle time at design conditions.

(e) Calculations showing volume of storage available in the event of a power outage. The storage zone shall be delineated on plan and profile drawings of the sewer system.

(f) Buoyancy computations showing that structures are protected against flotation.

Sec. 21-171. Shop Drawings.

After construction plan approval but before purchasing any lift station equipment, shop drawings shall be submitted including the following information:

(a) As-built drawings shall be furnished including one set of mylar sepias plus four (4) sets of prints Manufacturer's catalog sheets, performance curves, installation drawings, specifications and list of options for the specific pump that is offered for approval.

(b) Catalog data for controls, valves, hatches, yard hydrants, precast wet well and other manufactured items.

Sec. 21-172. Inspection and Certification.

(a) After installation and before placing the system into full operation, the work must be inspected by the developer's engineer who must then issue a certification to the City verifying that all work has been done in accordance with approved plans.

(b) After acceptance of the work by the engineer, a factory representative shall inspect and start up the system certifying rotation, capacity; amperage draw, lack of vibration and other standard check points.

(c) This certification shall state the beginning date of the warranty and include a copy of the warranty.

Sec. 21-173. Operations and Maintenance Manuals.

On or before the date of start-up, five sets of factory operations and maintenance manuals shall be delivered to the City. These shall include the name of the contractor (or whoever's name the purchase was under), the serial numbers of pumps, telephone number and address for purchase of parts and detailed wiring schematics.

Sec. 21-174. Warranty.

Regardless of the manufacturer's warranty terms, the developer will be responsible for all repairs necessary within one year from the date the station is completed and approved by the City. The developer will be required to furnish such assurances to the City as deemed appropriate by the City to ensure prompt action.

[Secs. 21-175 to 21-200. Reserved].

[Division IX and Division X. Reserved]

Division XI. Standard Drawings – Streets.

Division XII. Standard Drawings – Water.

Division XIII. Standard Drawings – Sewer.

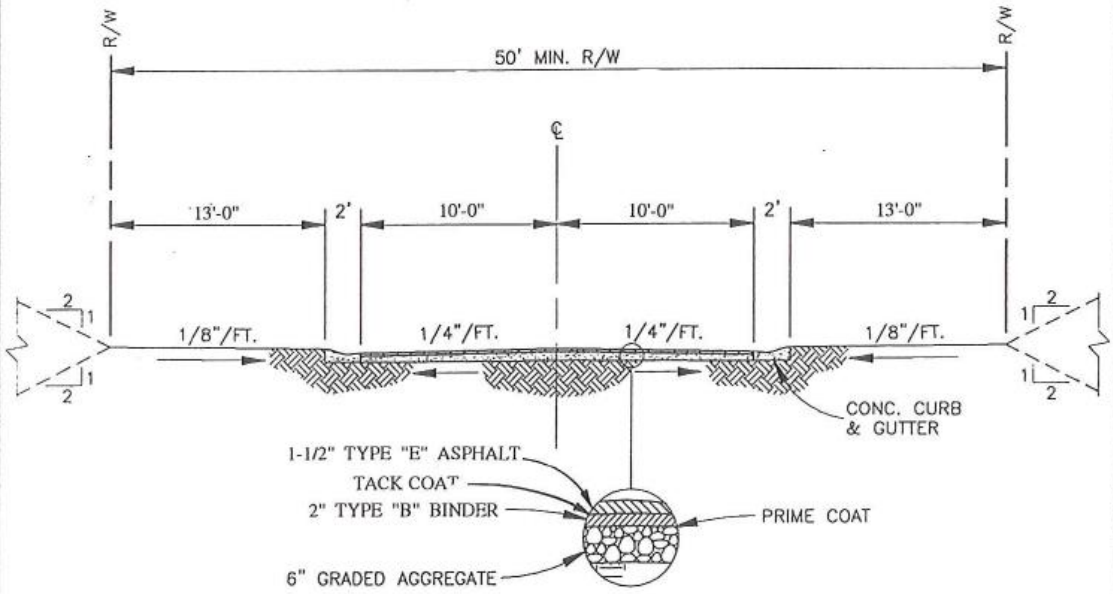

TYPICAL CROSS SECTION
PAVED RESIDENTIAL STREET

CITY OF POWDER SPRINGS, GEORGIA	PAVED RESIDENTIAL STREET CONSTRUCTION STANDARD	DATE: APPROVED:	STANDARD NO. 400.01

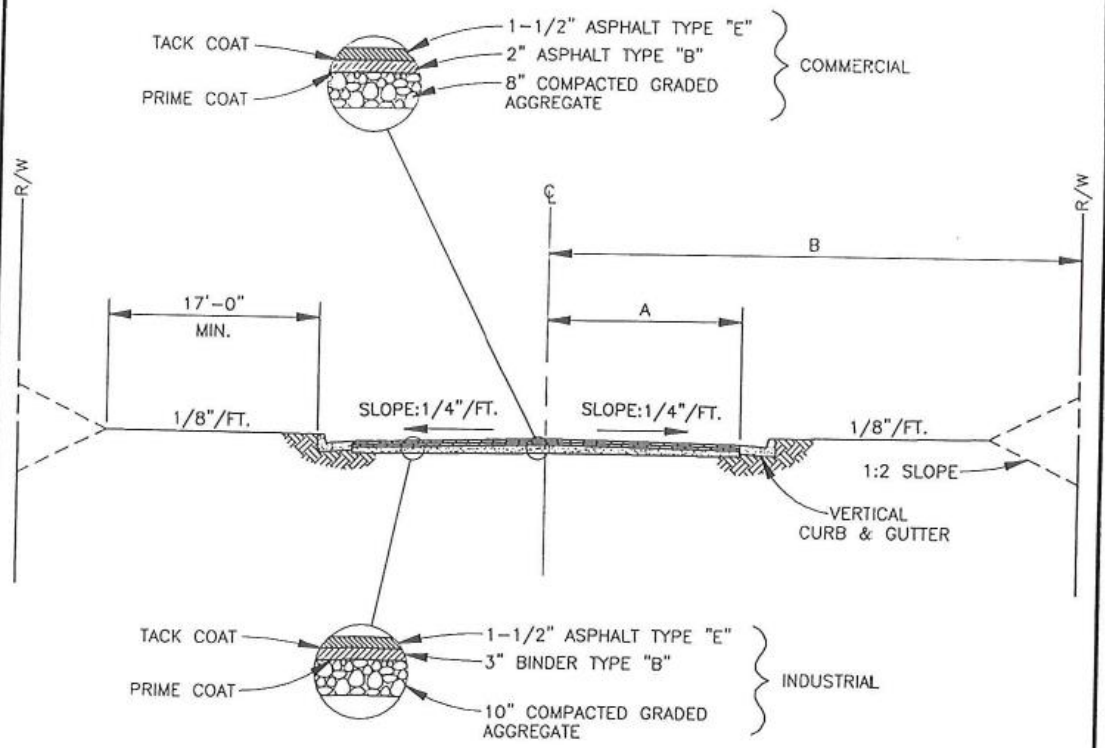

STREET CLASSIFICATION	PAVING WIDTH "A"	R/W WIDTH "B"
ARTERIAL	26'-33'	50'
MAJOR COLLECTOR	26'	40'
LOCAL OR MINOR COLLECTOR	14'	30'

TYPICAL CROSS SECTION
INDUSTRIAL/COMMERCIAL STREET

CITY OF POWDER SPRINGS, GEORGIA	INDUSTRIAL/ COMMERCIAL STREET CONSTRUCTION STANDARD	DATE: APPROVED:	STANDARD NO. 400.02

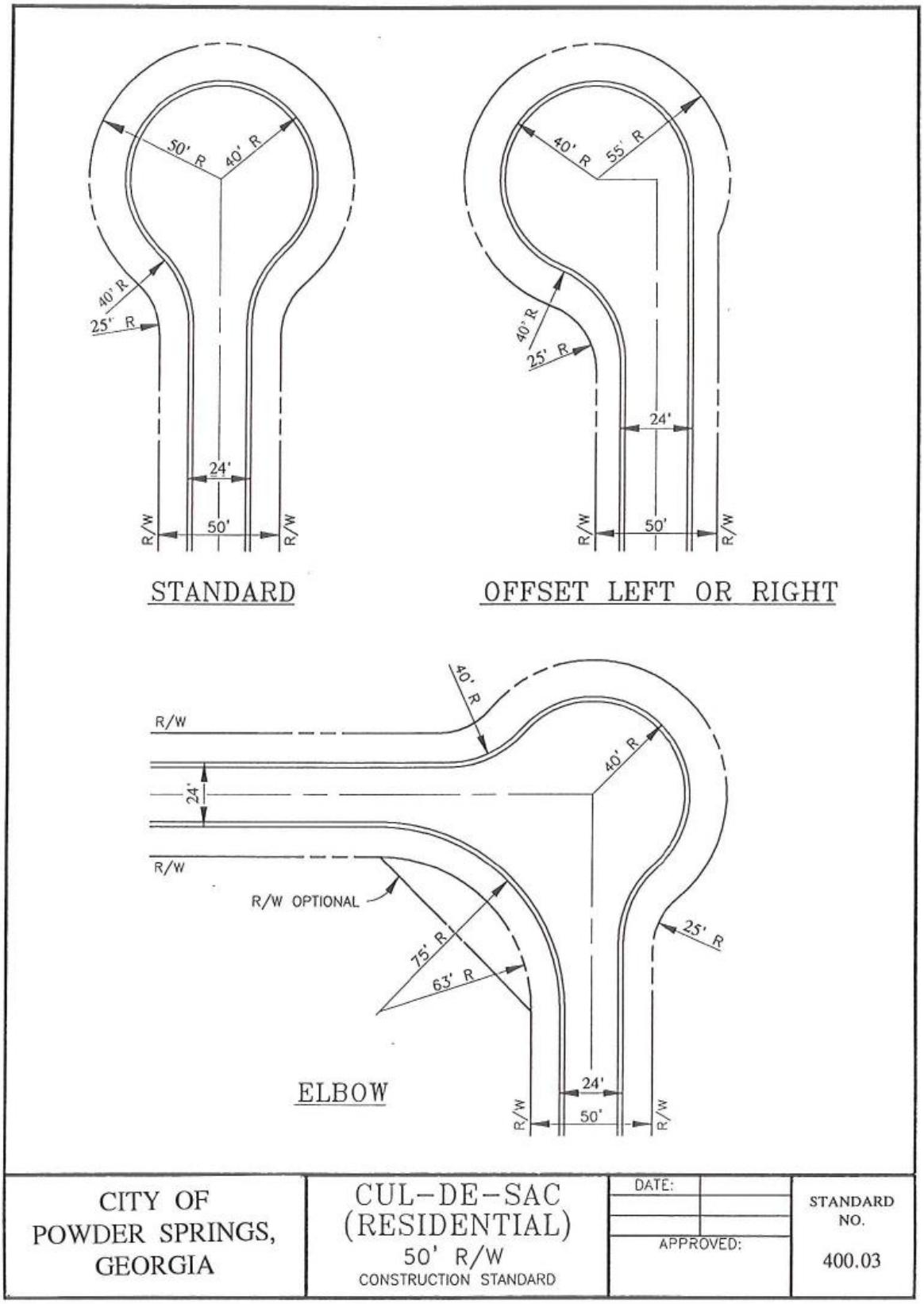
50' R
40' R
40' R
25' R
24'
R/W
50'
R/W
STANDARD
40' R
55' R
40' R
25' R
24'
R/W
50'
R/W
OFFSET LEFT OR RIGHT
40' R
R/W
40' R
24'
R/W
R/W OPTIONAL
75' R
63' R
25' R
ELBOW
24'
R/W
50'
R/W
CITY OF
POWDER SPRINGS,
GEORGIA
CUL-DE-SAC
(RESIDENTIAL)
50' R/W
CONSTRUCTION STANDARD
DATE:
APPROVED:
STANDARD
NO.
400.03

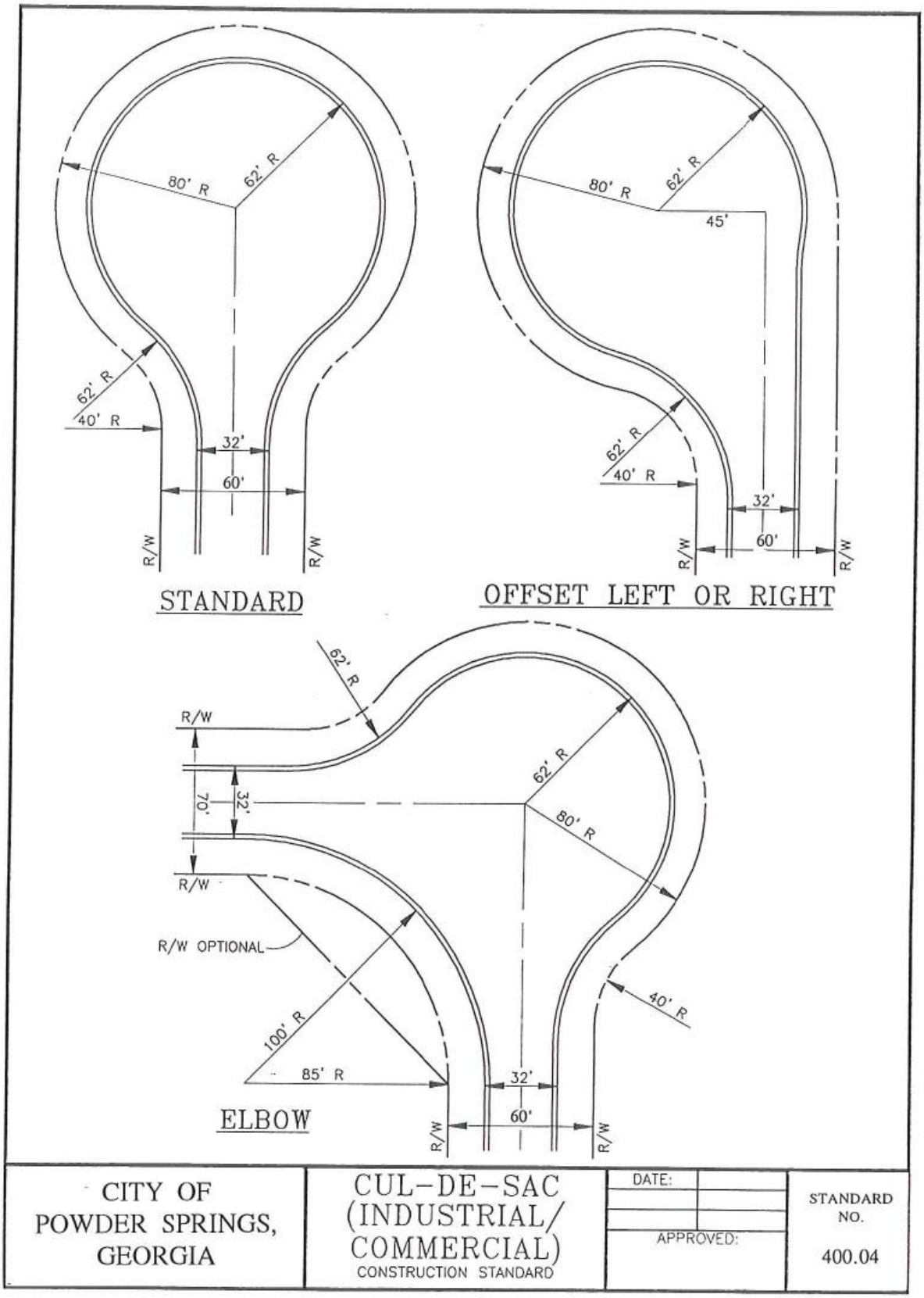
80' R
62' R
62' R
40' R
32'
60'
R/W
R/W
STANDARD
80' R
62' R
45'
62' R
40' R
32'
60'
R/W
R/W
OFFSET LEFT OR RIGHT
62' R
R/W
62' R
70'
32'
80' R
R/W
R/W OPTIONAL
100' R
85' R
40' R
32'
60'
R/W
R/W
ELBOW
CITY OF POWDER SPRINGS, GEORGIA
CUL-DE-SAC (INDUSTRIAL/ COMMERCIAL)
CONSTRUCTION STANDARD
DATE:
APPROVED:
STANDARD NO.
400.04

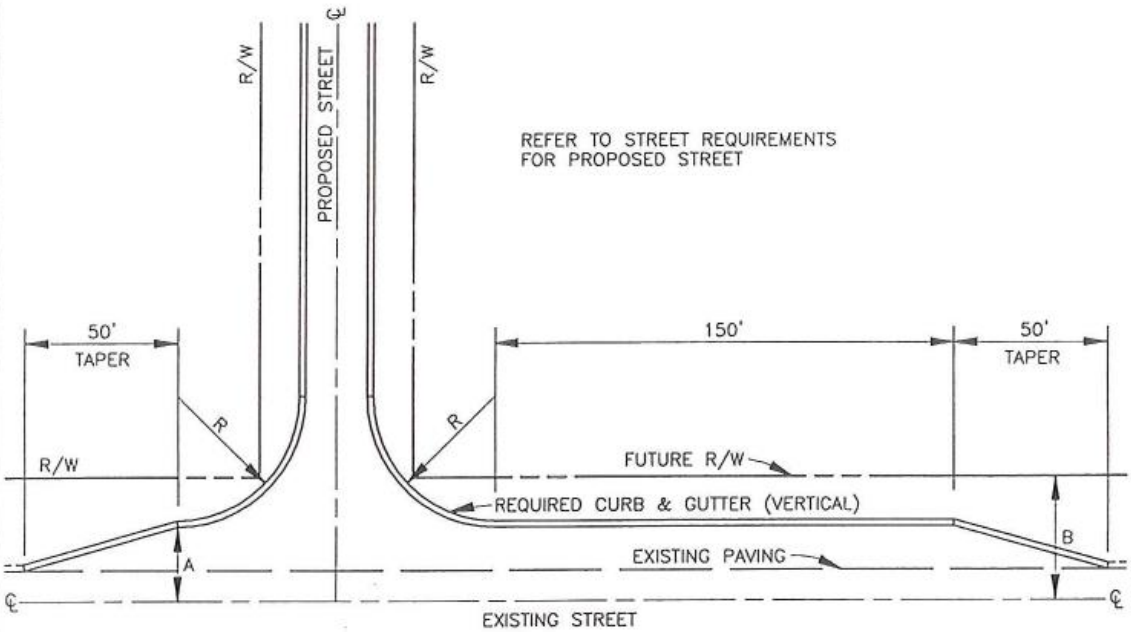

EXISTING STREET CLASSIFICATION	RADII R	STREET WIDTH TO E.P. (A)	RIGHT OF WAY WIDTH FROM ℄ (B)
ARTERIAL	40'	24'+	50'+
MAJOR COLLECTOR	40'	24'	40'
MINOR COLLECTOR	25'	24'	30'
LOCAL	25'	20'	25'

NOTES:

1. THIS STANDARD DOES NOT APPLY TO INTERSECTIONS WITHIN SUBDIVISIONS.
2. CURB AND GUTTER REQUIRED ON 50' TAPERS IF EXISTING STREET HAS CURB AND GUTTER

SUBDIVISION ENTRANCE DETAIL

CITY OF POWDER SPRINGS, GEORGIA	SUBDIVISION ENTRANCE DETAIL CONSTRUCTION STANDARD	DATE: APPROVED:	STANDARD NO. 400.05

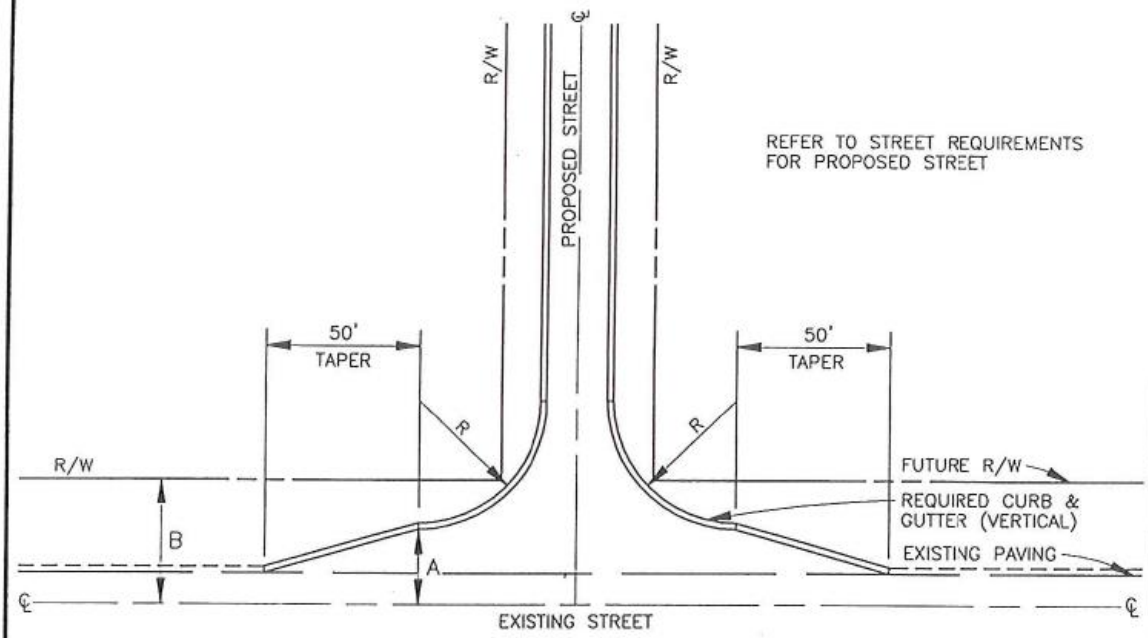

EXISTING STREET CLASSIFICATION	RADII R	STREET WIDTH TO E.P. (A)	RIGHT OF WAY WIDTH FROM ℄ (B)
MINOR COLLECTOR	25'	24'	30'
LOCAL	25'	20'	25'

NOTES:

1. THIS STANDARD DOES NOT APPLY TO INTERSECTIONS WITHIN SUBDIVISIONS.
2. CURB AND GUTTER REQUIRED ON 50' TAPERS IF EXISTING STREET HAS CURB AND GUTTER

SUBDIVISION ENTRANCE DETAIL

CITY OF POWDER SPRINGS, GEORGIA	SUBDIVISION ENTRANCE DETAIL CONSTRUCTION STANDARD	DATE: APPROVED:	STANDARD NO. 400.06

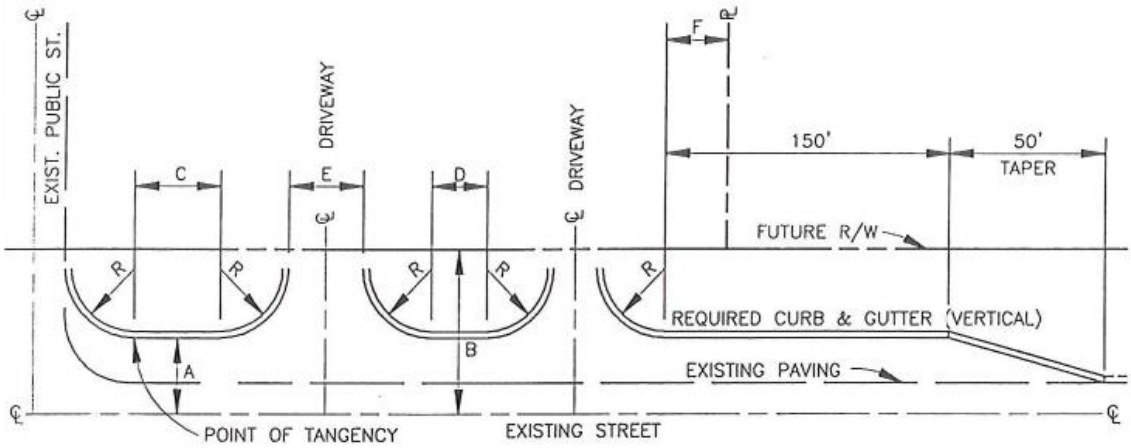

EXISTING STREET CLASSIFICATION	RADII R	"A"	"B"	"C"	"D"	1-LANE "E"	2-LANE "E"	"F"
ARTERIAL	25'	24'+	50'+	50'	40'+	14'-18'	24'-30'	20'+
MAJOR COLLECTOR	20'	24'	40'	50'	40'	↓	↓	20'
MINOR COLLECTOR	15'	24'	30'	50'	40'	↓	↓	20'
LOCAL	10'	20'	25'	40'	20'	↓	↓	15'

NOTE:

1. CURB AND GUTTER REQUIRED ON 50' TAPERS IF EXISTING STREET HAS CURB AND GUTTER

COMMERCIAL/INDUSTRIAL DRIVEWAY DETAIL

CITY OF POWDER SPRINGS, GEORGIA	COMMERCIAL/ INDUSTRIAL DRIVEWAY DETAIL CONSTRUCTION STANDARD	DATE: APPROVED:	STANDARD NO. 400.07

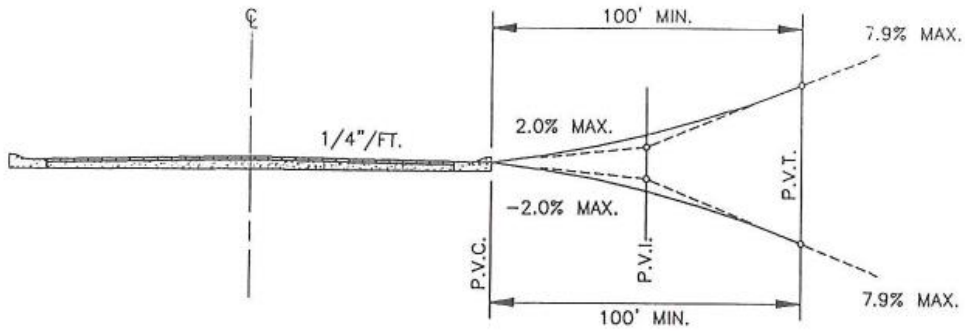

LANDING REQUIREMENT
FOR LESS THAN 8.0%

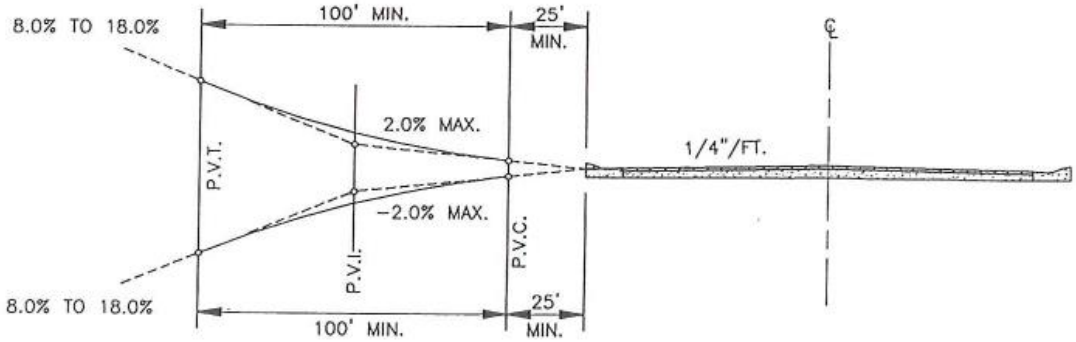

LANDING REQUIREMENT
FOR 8.0% OR LARGER

CITY OF POWDER SPRINGS, GEORGIA	LANDING REQUIREMENTS (FOR STREET INTERSECTIONS) CONSTRUCTION STANDARD	DATE: APPROVED:	STANDARD NO. 400.08

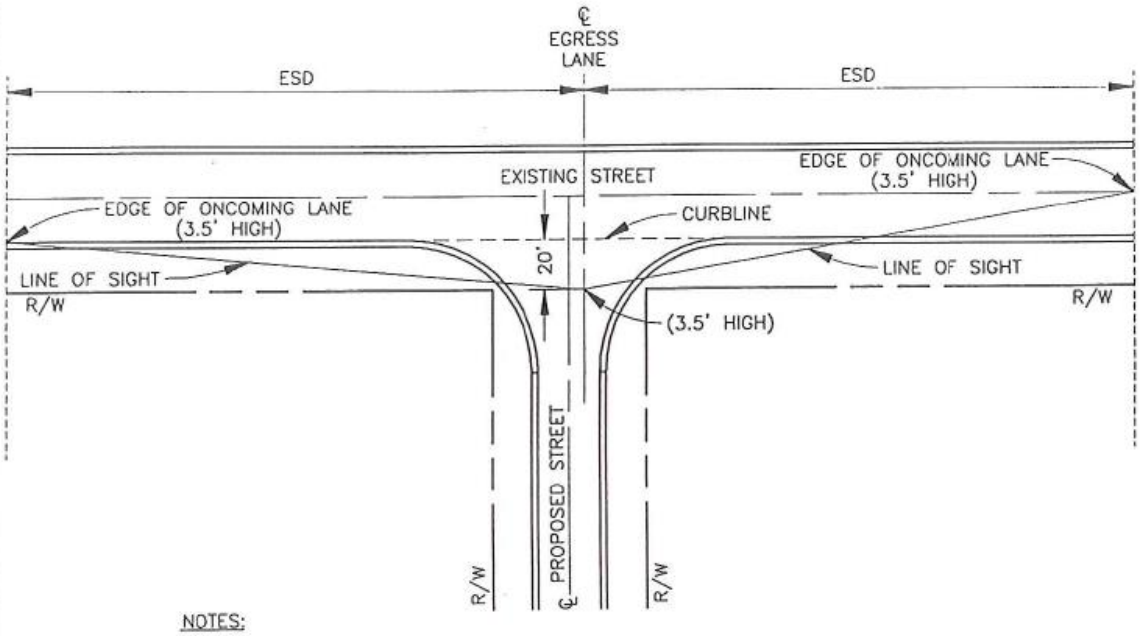

NOTES:

1. ENTRANCE SIGHT DISTANCE FOR NEW DEVELOPMENTS SHALL CONFORM TO "A POLICY ON GEOMETRIC DESIGN OF HIGHWAYS AND STREETS" MOST CURRENT EDITION, BY AASHTO. THE DETAIL SHOWN FOR DETERMINING SIGHT DISTANCE IS PROVIDED AS A GENERAL GUIDE. THE DESIGN PROFESSIONAL SHOULD REFER TO AASHTO STANDARDS TO DETERMINE IF THE PROPOSED ENTRANCE HAS ADEQUATE DISTANCE FOR ALL TURNING MOVEMENTS.

2. ENTRANCE SIGHT DISTANCE IS MEASURED FROM A POINT OF BEGINNING ESTABLISHED 20 FEET BEHIND THE BACK OF CURBLINE ON THE CENTERLINE OF THE EGRESS LANE, AT A HEIGHT OF 3.5 FEET ABOVE FINISHED GRADE ELEVATION. THE LINE OF SIGHT IS THEN EXTENDED THE MINIMUM REQUIRED DISTANCE TO EITHER SIDE OF ABUTTING STREET ALONG THOROUGHFARE TO THE EDGE OF THE ONCOMING TRAFFIC LANE (LANE OF THREAT), TERMINATING AT A POINT 3.5 FEET ABOVE FINISHED PAVEMENT ELEVATION.

3. NEW DEVELOPMENT ENTRANCES INCLUDES ENTRANCE INTERSECTIONS FOR SUBDIVISIONS AND ENTRANCE DRIVEWAYS FOR COMMERICIAL/INDUSTRIAL DEVELOPMENTS.

POSTED SPEED LIMIT OF ROADWAY WHICH VEHICLE IS ENTERING (MPH)	ESD SIGHT DISTANCE (EACH WAY)
25	200'
35	325'
45	550'
55	750'

ENTRANCE SIGHT DISTANCE

CITY OF POWDER SPRINGS, GEORGIA	DEVELOPMENT ENTRANCE SIGHT DISTANCE CONSTRUCTION STANDARD	DATE: APPROVED:	STANDARD NO. 400.09

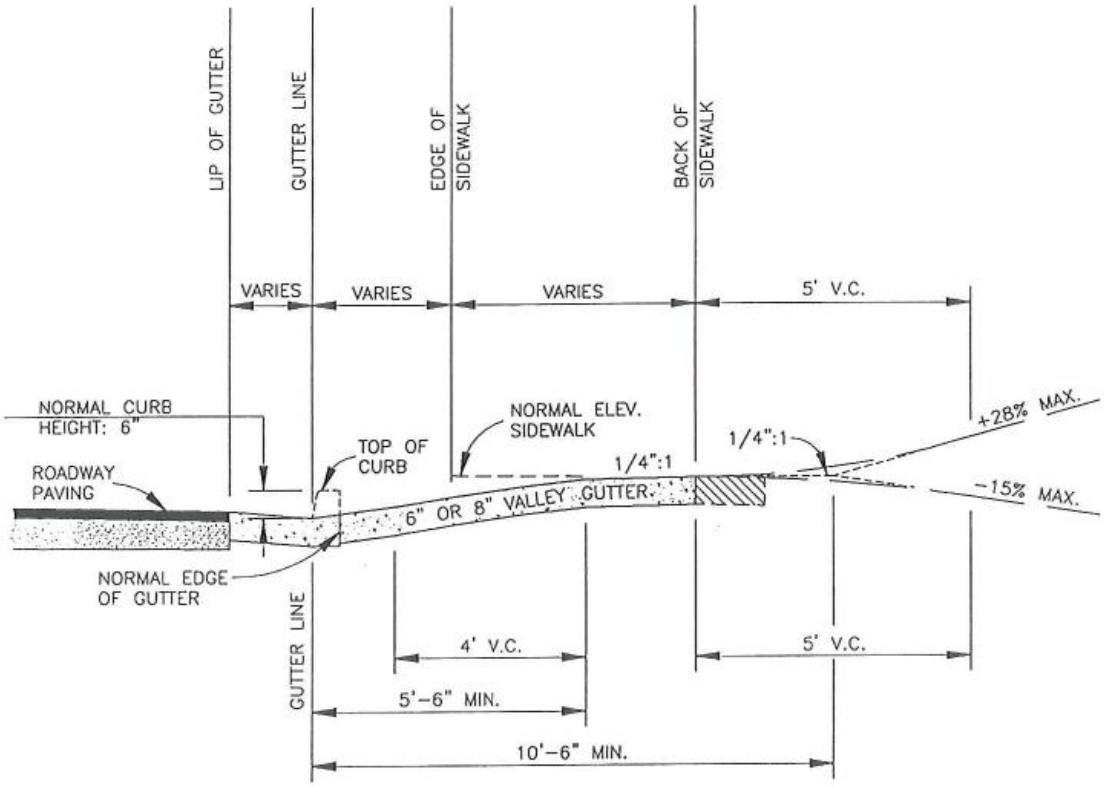

SECTION

NOTES:

1. VALLEY GUTTER EQUAL TO GEORGIA STANDARD 9031J.
2. VALLEY GUTTER SHALL BE CONCRETE.

COMMERCIAL DRIVEWAY ON EXISTING STREET

CITY OF POWDER SPRINGS, GEORGIA	COMMERCIAL DRIVEWAY ON EXISTING STREET CONSTRUCTION STANDARD	DATE: APPROVED:	STANDARD NO. 400.10

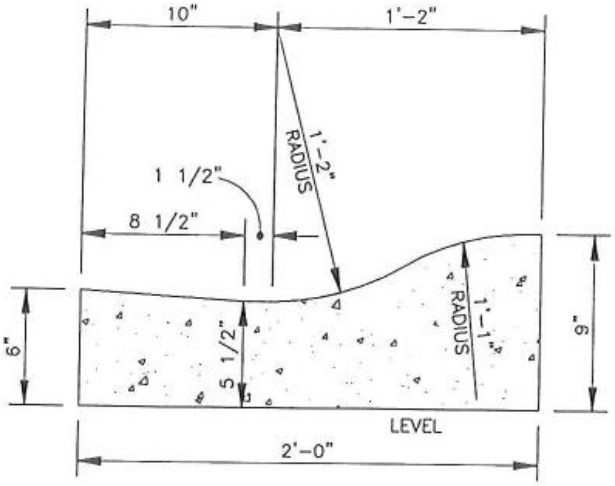

ROLL BACK CURB

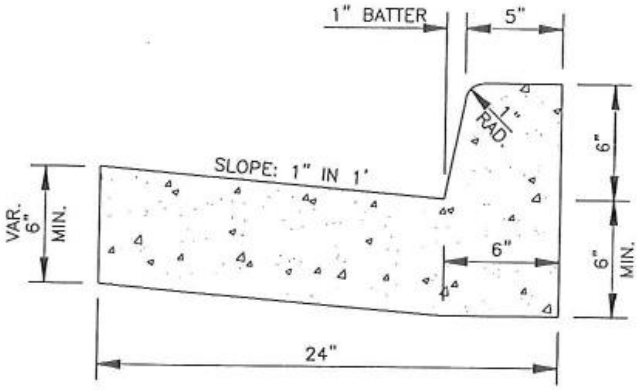

VERTICAL CURB

NOTES:

1. VERTICAL CURB SHALL COMPLY WITH GEORGIA STANDARD 9032B, 6" x 24", TYPE 2.
2. 1/2" PREFORMED EXPANSION JOINTS WILL BE REQUIRED AT TANGENT POINTS OF RADIUS RETURNS, AT DRIVEWAYS, AND STREET INTERSECTIONS AND AT 40' INTERVALS ALONG THE CURB.

CITY OF POWDER SPRINGS, GEORGIA	CURB DETAILS RESIDENTIAL/COMMERCIAL & INDUSTRIAL CONSTRUCTION STANDARD	DATE: APPROVED:	STANDARD NO. 400.11

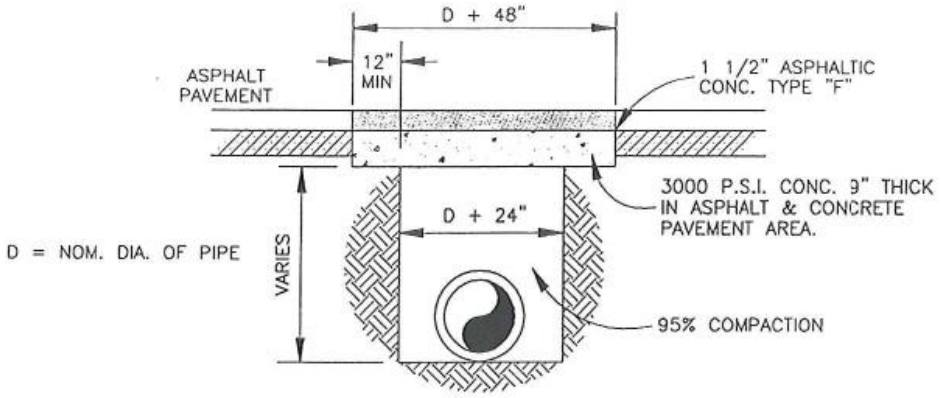

STATE OR STATE-AID ROADS

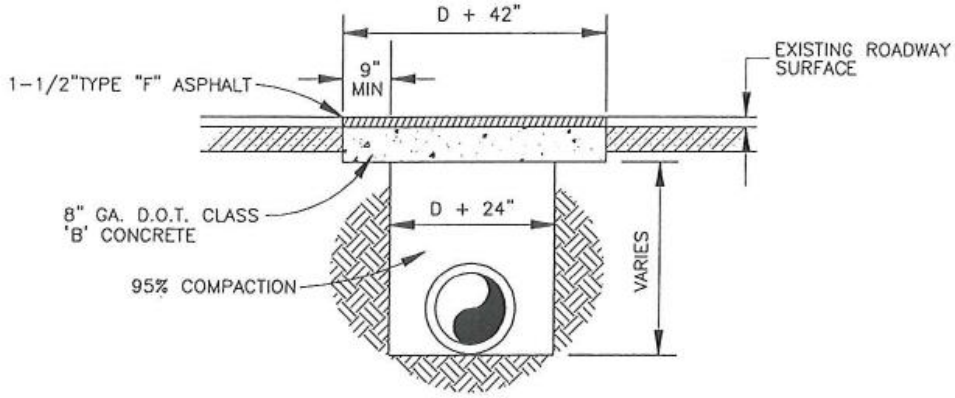

NOTES:

1. PERMISSION MUST BE OBTAINED TO OPEN CUT EXISTING ROADS.
2. ROADWAYS WILL GENERALLY BE BORED OR TUNNELED FROM DITCH LINE TO DITCH LINE.
3. IF CONCRETE PAVEMENT, REPLACE WITH ORIGINAL THICKNESS (MINIMUM 8"), FLUSH WITH EXISTING PAVEMENT.

CITY ROADS

CITY OF POWDER SPRINGS, GEORGIA	TYPICAL STREET CUT REPAIR CONSTRUCTION STANDARD	DATE: APPROVED:	STANDARD NO. 400.13

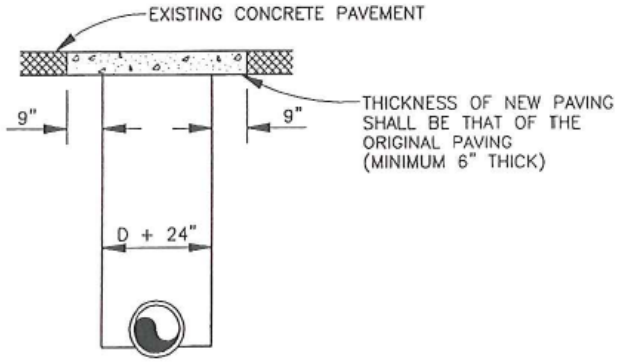

CONCRETE DRIVEWAY

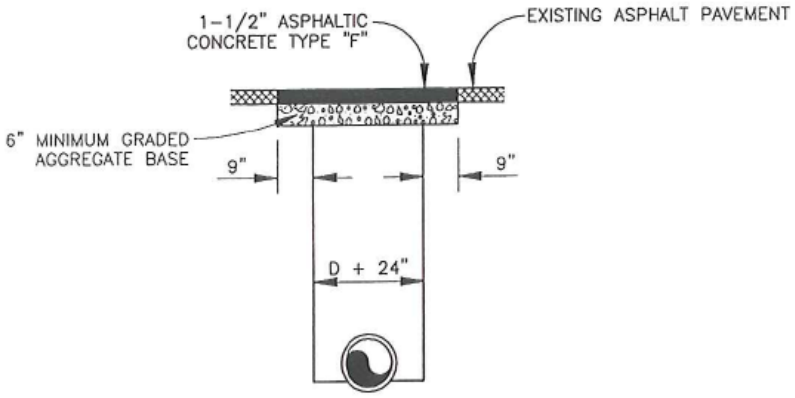

ASPHALT DRIVEWAY

NOTES:

1. BACKFILL TO BE PLACED IN TRENCH IN 6" LAYERS AND THOROUGHLY TAMPED WITH MECHANICAL TAMP TO 95% COMPACTION
2. D = NOMINAL PIPE DIAMETER

CITY OF POWDER SPRINGS, GEORGIA	TYPICAL DRIVEWAY CUT REPAIR CONSTRUCTION STANDARD	DATE: APPROVED:	STANDARD NO. 400.14

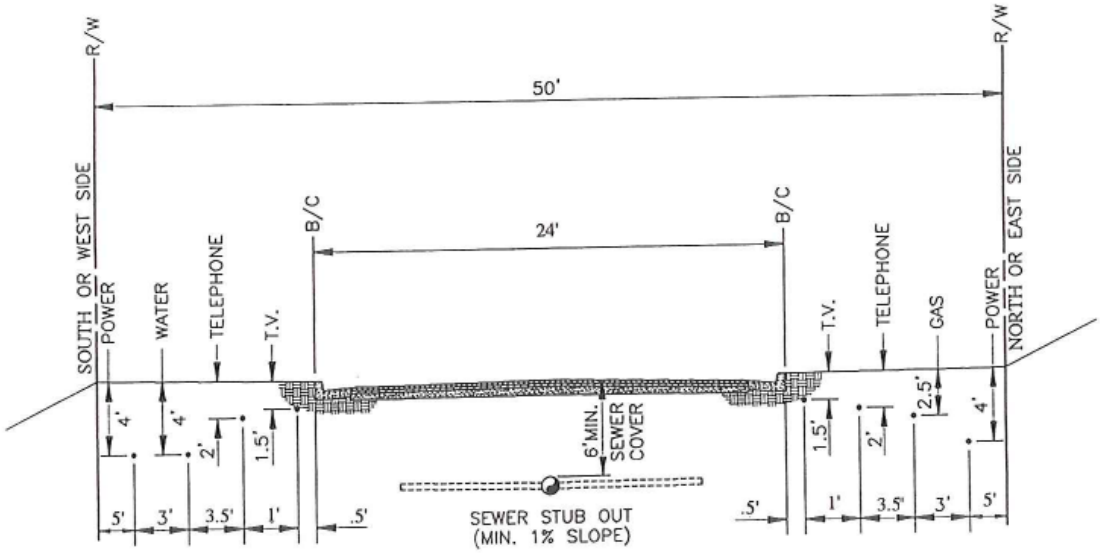

TYPICAL CROSS SECTION
RESIDENTIAL STREET
UTILITY LOCATION
50' R/W

NOTE: ON ALL EXISTING STREETS W/O CURB & GUTTER, NO UTILITIES SHALL ENCROACH CLOSER THAN 2.5 FT. TO EDGE OF PAVEMENT.

CITY OF POWDER SPRINGS, GEORGIA	RESIDENTIAL ST. UTILITY LOCATION (50' R/W) CONSTRUCTION STANDARD	DATE: APPROVED:	STANDARD NO. 400.15

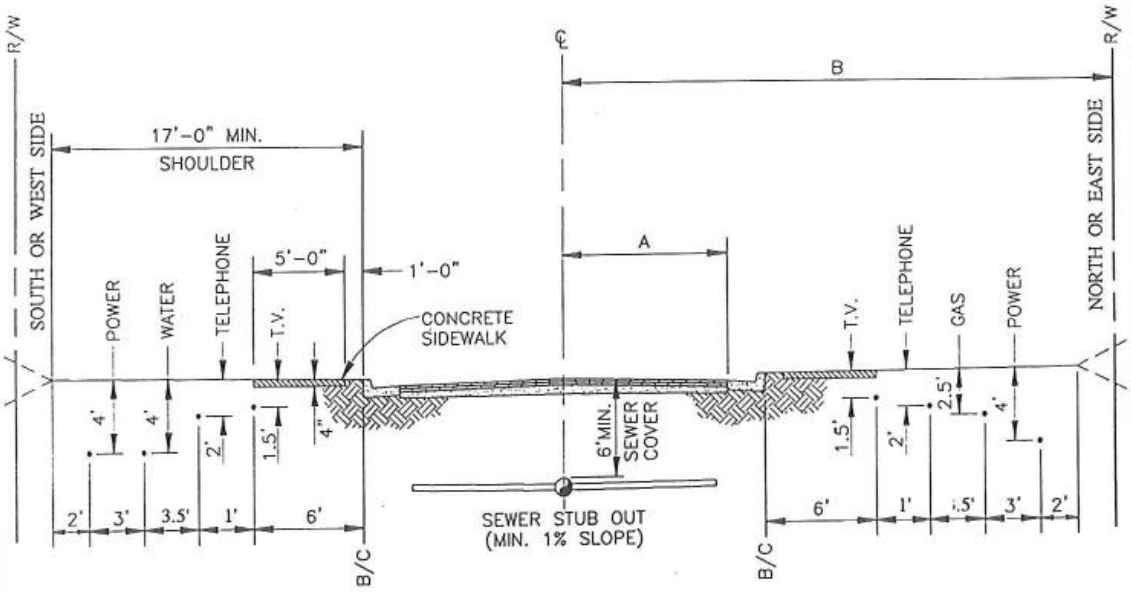

STREET CLASSIFICATION	PAVING WIDTH "A"	R/W WIDTH "B"
ARTERIAL	26'-33'	50'
MAJOR COLLECTOR	26'	40'
LOCAL OR MINOR COLLECTOR	14'	30'

TYPICAL CROSS SECTION
INDUSTRIAL/COMMERCIAL STREET
UTILITY LOCATION

NOTE: ON ALL EXISTING STREETS W/O CURB & GUTTER, NO UTILITIES SHALL ENCROACH CLOSER THAN 2.5 FT. TO EDGE OF PAVEMENT.

CITY OF POWDER SPRINGS, GEORGIA	INDUSTRIAL/ COMMERCIAL ST. UTILITY LOCATION CONSTRUCTION STANDARD	DATE: APPROVED:	STANDARD NO. 400.16

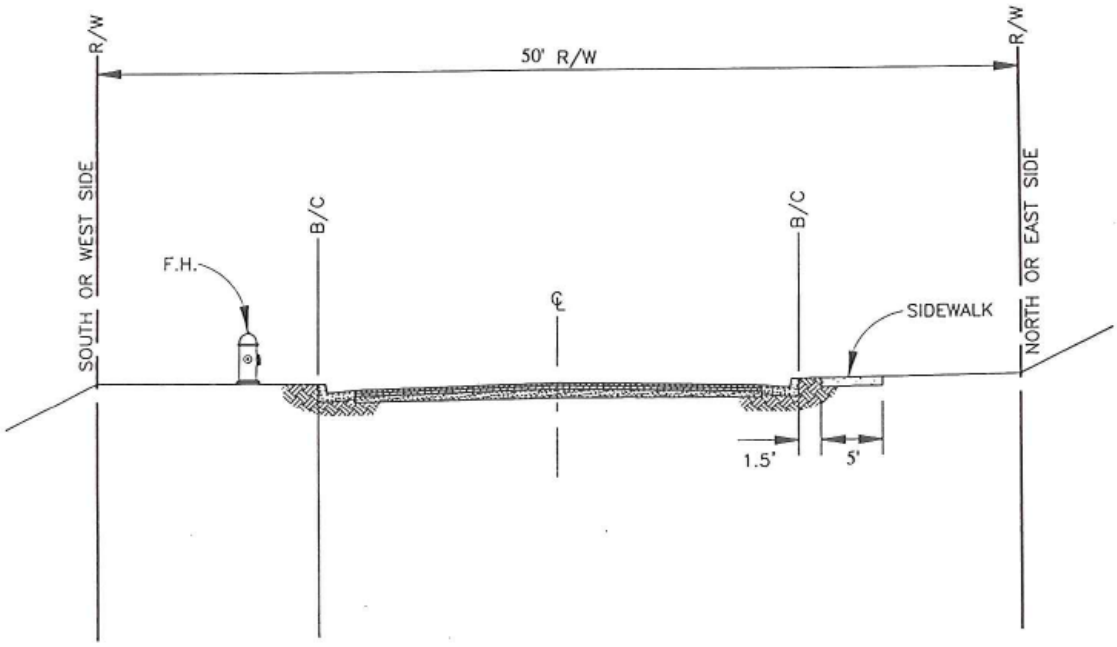

CROSS SECTION

NOTES:

1. SIDEWALKS NORMALY TO BE LOCATED ON THE NORTH OR EAST SIDE OF STREET.
2. IN CASES WHERE STREET CONFIGURATION REQUIRES SIDEWALK TO BE LOCATED ON THE SOUTH OR WEST SIDE OF STREET, FIRE HYDRANTS MUST BE LOCATED ON OPPOSITE SIDE OF STREET.

CITY OF POWDER SPRINGS, GEORGIA	SIDEWALK LOCATION (50' R/W) CONSTRUCTION STANDARD	DATE: APPROVED:	STANDARD NO. 400.18

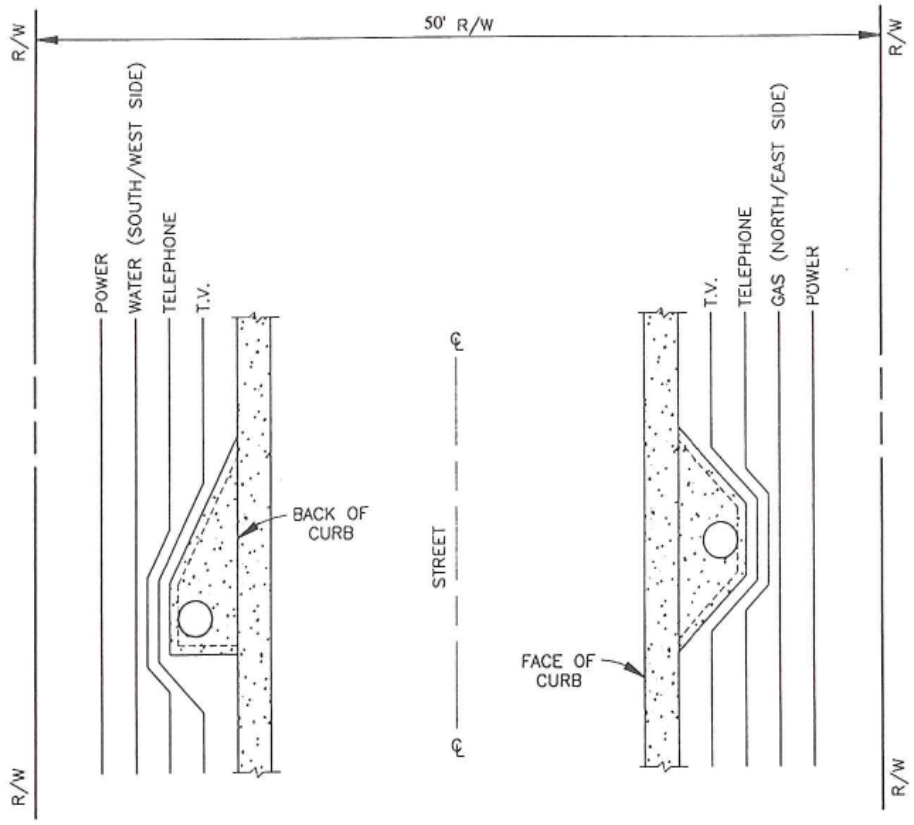

PLAN

CITY OF POWDER SPRINGS, GEORGIA	UTILITY LOCATIONS (50' R/W) CONSTRUCTION STANDARD	DATE: APPROVED:	STANDARD NO. 400.19

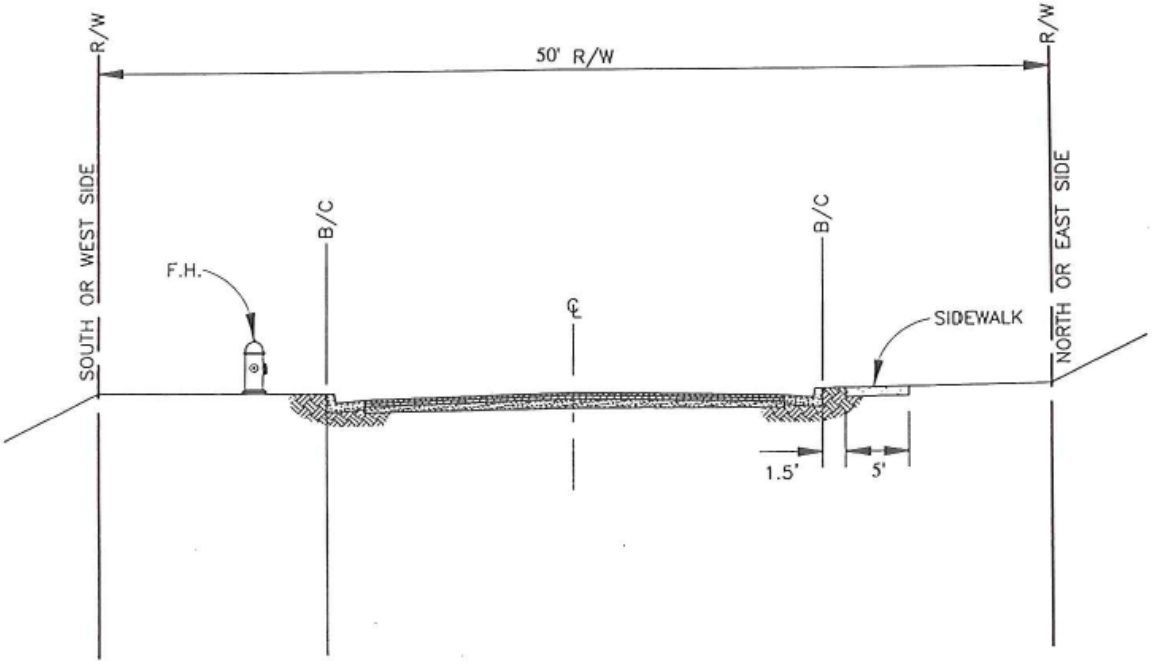

CROSS SECTION

NOTES:

1. SIDEWALKS NORMALY TO BE LOCATED ON THE NORTH OR EAST SIDE OF STREET.
2. IN CASES WHERE STREET CONFIGURATION REQUIRES SIDEWALK TO BE LOCATED ON THE SOUTH OR WEST SIDE OF STREET, FIRE HYDRANTS MUST BE LOCATED ON OPPOSITE SIDE OF STREET.

CITY OF POWDER SPRINGS, GEORGIA	SIDEWALK LOCATION (50' R/W) CONSTRUCTION STANDARD	DATE: APPROVED:	STANDARD NO. 400.18

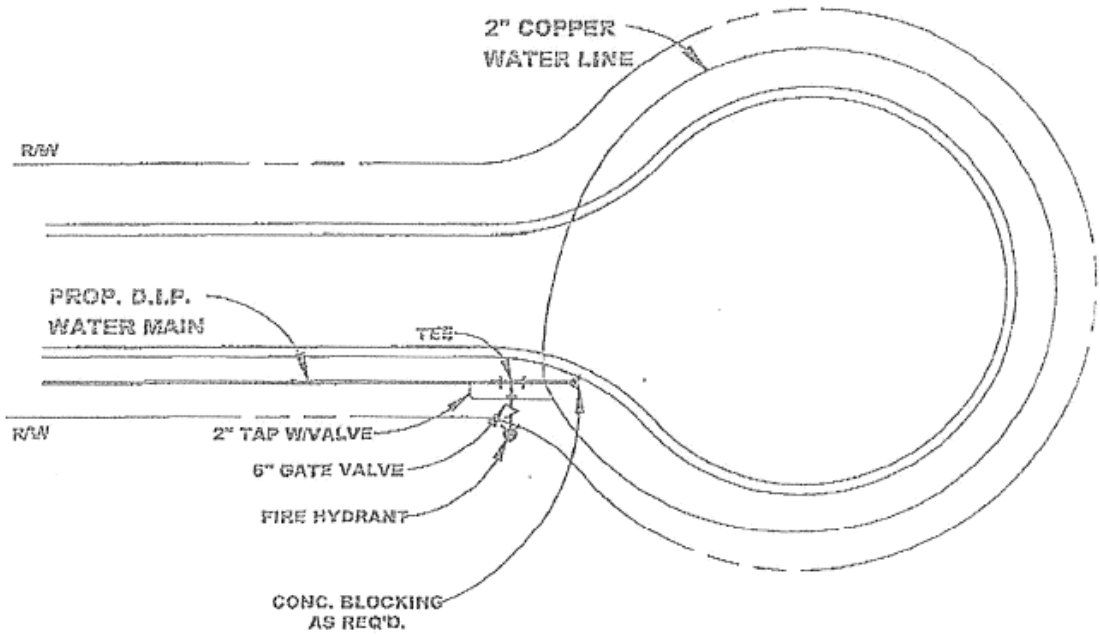

TYPICAL WATER MAIN
AT CUL-DE-SAC

CITY OF POWDER SPRINGS, GEORGIA	TYPICAL WATER MAIN AT CUL-DE-SAC CONSTRUCTION STANDARD	DATE: APPROVED:	STANDARD NO. 401.01

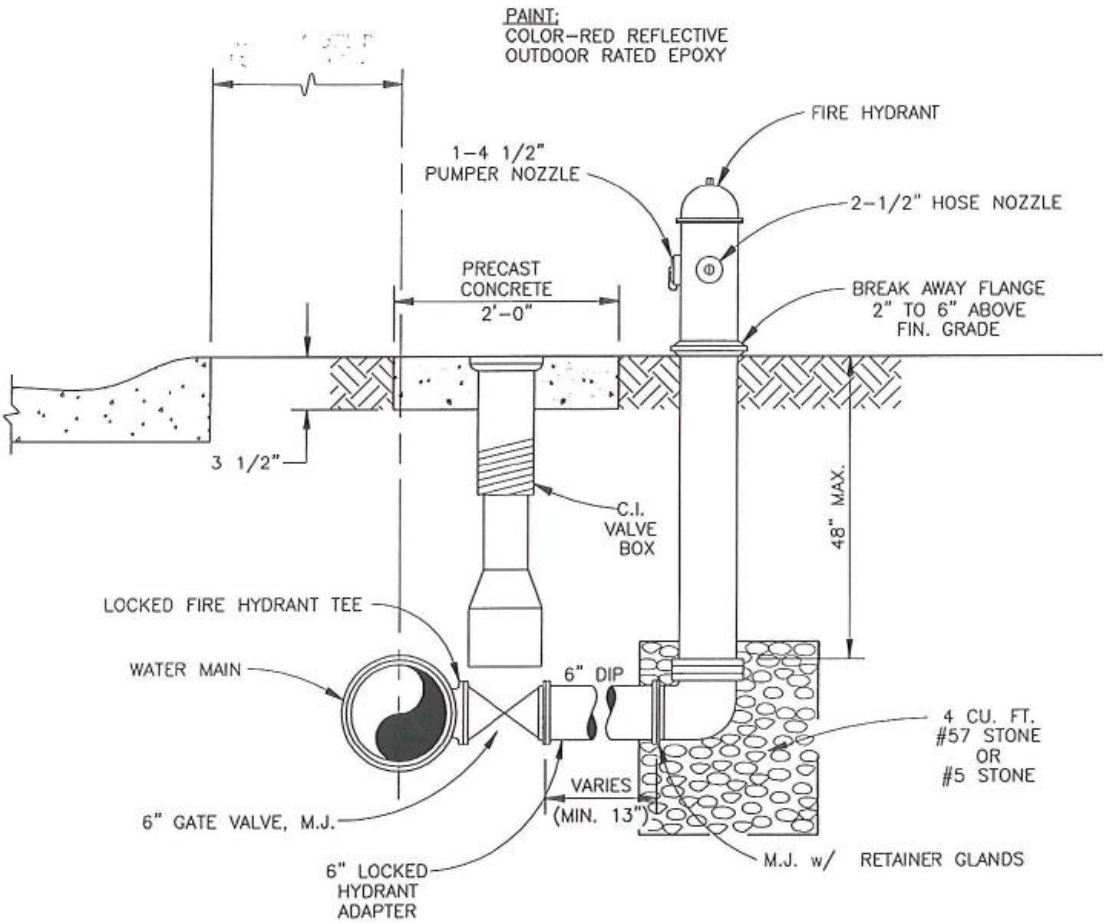

NOTES:

1. 4 1/2" PUMPER NOZZLE TO FACE STREET
2. HYDRANT NOT TO BE SET ON STREET SIDE OF WATER MAIN
3. VALVE BOX TO BE ADJUSTED TO GRADE
4. CONCRETE COLLAR AROUND VALVE BOX IF NOT IN PAVED AREA
5. GRAVEL TO BE PLACED AROUND HYDRANT DRAIN, MINIMUM DIMENSIONS 20" x 20" x 20"

TYPICAL FIRE HYDRANT INSTALLATION

CITY OF POWDER SPRINGS, GEORGIA	TYPICAL FIRE HYDRANT INSTALLATION CONSTRUCTION STANDARD	DATE: APPROVED:	STANDARD NO. 401.02

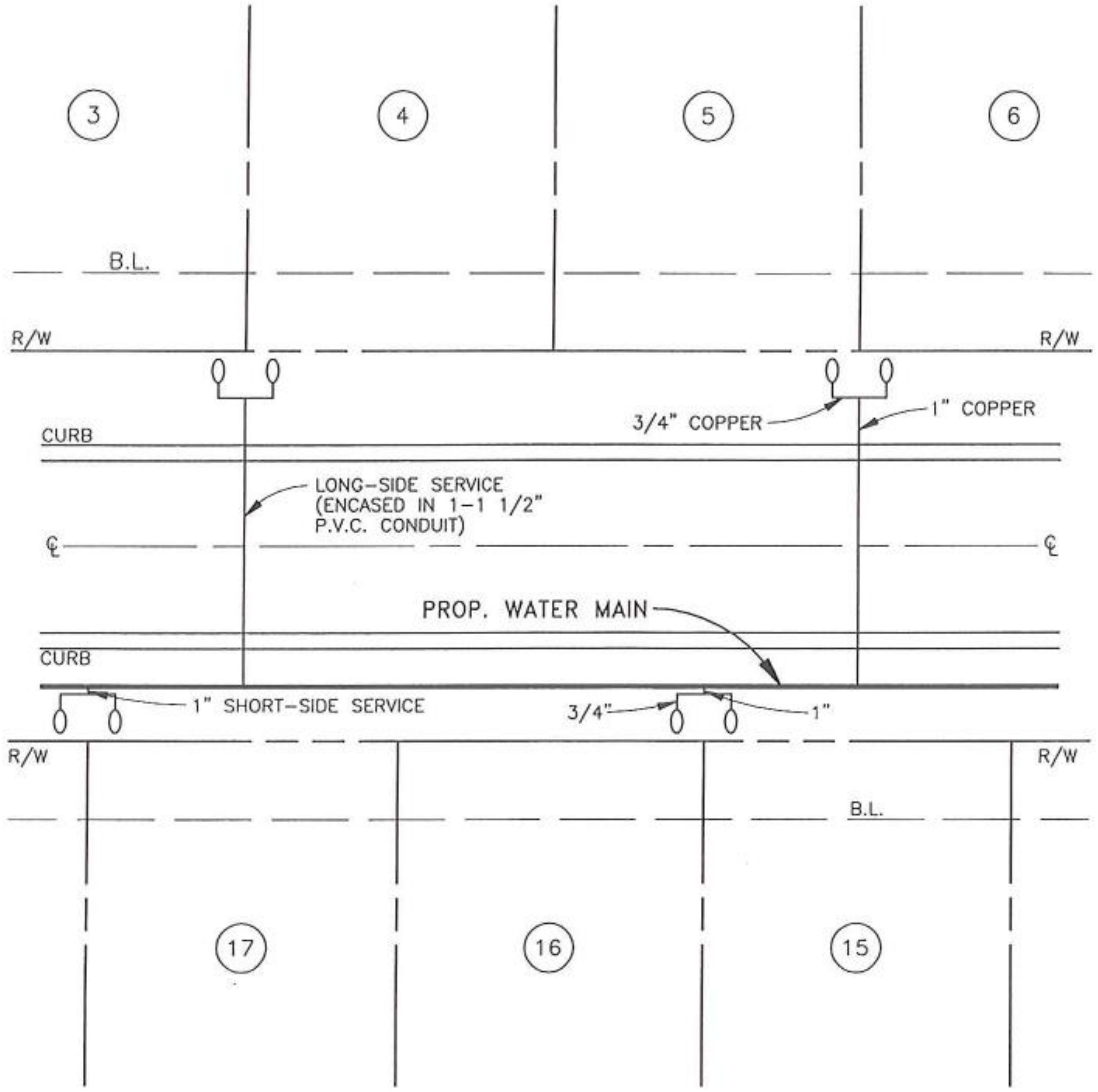

3/4" WATER METER LOCATION
(FOR SUBDIVISION)

CITY OF POWDER SPRINGS, GEORGIA	3/4" WATER METER LOCATION (FOR SUBDIVISIONS) CONSTRUCTION STANDARD	DATE: APPROVED:	STANDARD NO. 401.03

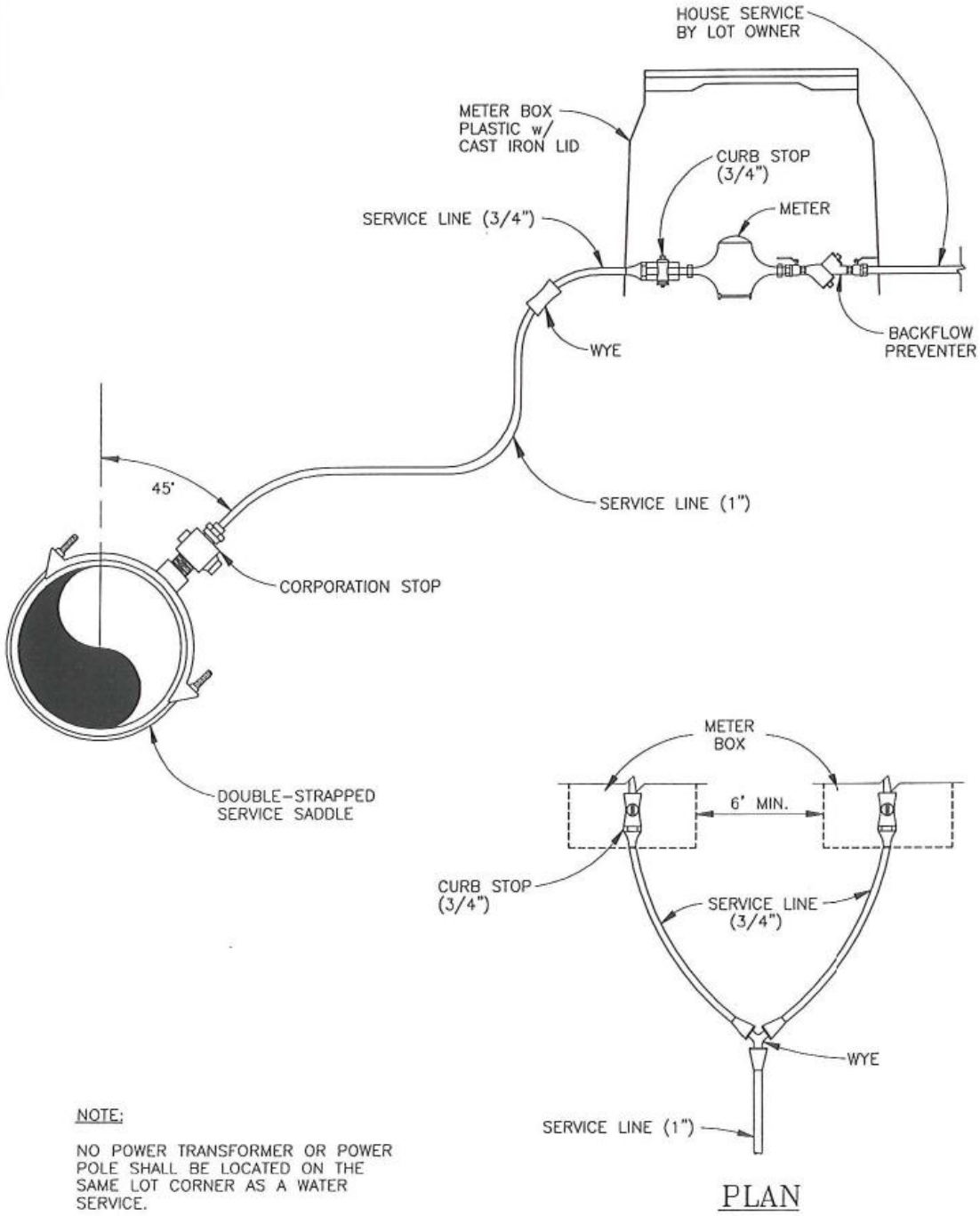

NOTE:

NO POWER TRANSFORMER OR POWER POLE SHALL BE LOCATED ON THE SAME LOT CORNER AS A WATER SERVICE.

CITY OF POWDER SPRINGS, GEORGIA	RESIDENTIAL WATER METER INSTALLATION CONSTRUCTION STANDARD	DATE: APPROVED:	STANDARD NO. 401.04

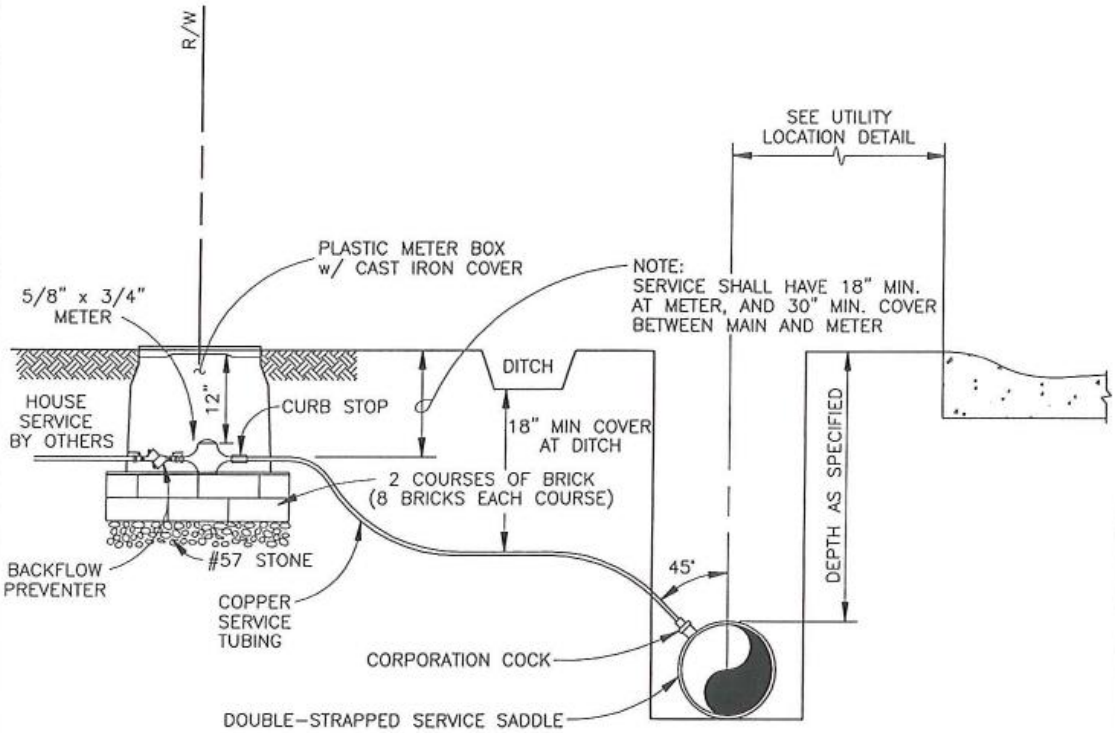

NOTES:

1. SERVICE LINE SHALL BE 3/4" FROM MAIN WHEN ONLY ONE 3/4" SERVICE IS REQUIRED.
2. USE ALL FLARE JOINTS.
3. INSTALLATION SHALL ALLOW ADEQUATE ROOM TO REMOVE AND/OR REPAIR METER.

HOUSE SERVICE INSTALLATION

CITY OF POWDER SPRINGS, GEORGIA	HOUSE SERVICE INSTALLATION CONSTRUCTION STANDARD	DATE: APPROVED:	STANDARD NO. 401.05

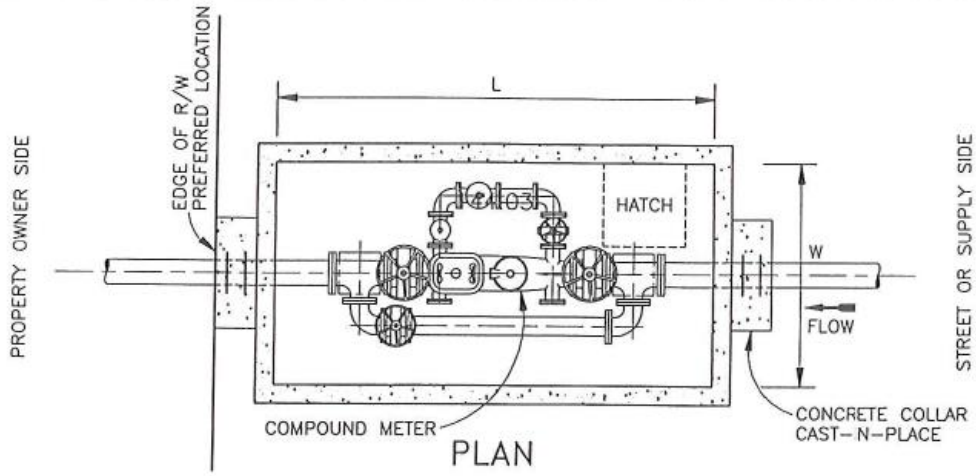

PLAN

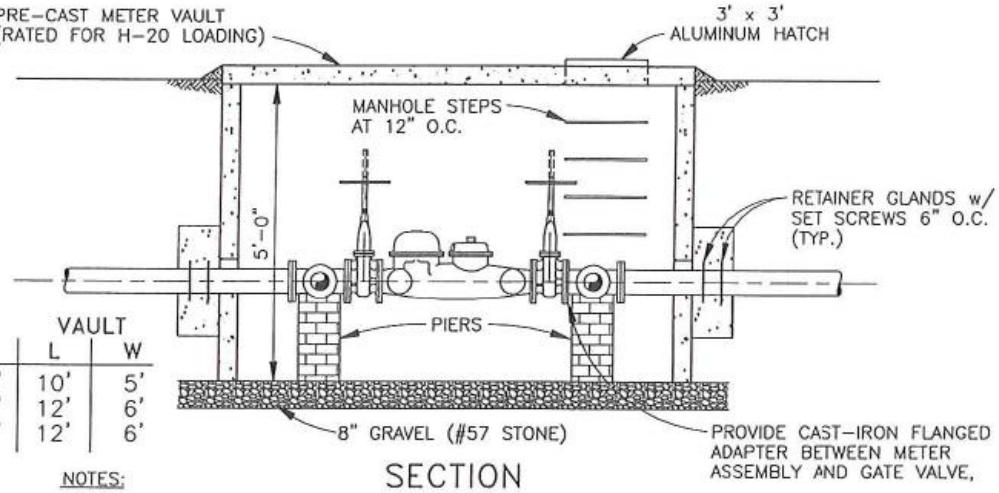

METER SIZE	VAULT L	VAULT W
4" x 2"	10'	5'
6" x 3"	12'	6'
8" x 4"	12'	6'

SECTION

NOTES:

1. BOXES EXCEEDING 5' IN DEPTH MUST BE APPROVED BY THE CITY
2. WHEN METER BOX CANNOT BE LOCATED ENTIRELY ON R/W, A PERMANENT EASEMENT SHALL BE OBTAINED TO PREVENT FENCES OR OTHER OBSTRUCTIONS FROM BEING ERECTED AROUND THE METER BOX.
3. COVER OPENING & STEPS TO BE PLACED NEAREST THE METER REGISTER.
4. BYPASS REQUIRED (WITH VALVES).
5. THE METER MUST BE INSTALLED WITH AT LEAST 8 DIAMETERS OF STRAIGHT PIPE SAME SIZE AS METER ON THE INLET SIDE TO PERMIT ON-SITE MAINTENANCE AND CALIBRATION. AN INLET AND OUTLET GATE VALVE WITH BYPASS LINE ARE REQUIRED (SEE ILLUSTRATION).
6. THESE BOXES ARE NOT TO BE INSTALLED IN TRAFFIC AREAS WITHOUT PRIOR PERMISSION FROM THE
7. DOUBLE CHECK BACK FLOW PREVENTION REQUIRED ON PROPERTY OWNER'S SIDE OF METER. LOCATION SHALL BE APPROVED BY THE
8. ALL VALVES AND FITTINGS INSIDE THE VAULT SHALL BE FLANGED.
9. ALL FITTINGS OUTSIDE THE VAULT SHALL BE MECHANICAL JOINT WITH RETAINER GLANDS.
10. ALL METERS SHALL COME EQUIPPED WITH A TOUCHREAD OR TOUCHLESS SENSOR COMPATIBLE WITH THE CITY'S METER READING EQUIPMENT.
11. FOR COMPOUND METERS 4" AND SMALLER, THE BYPASS SHALL BE INSTALLED INSIDE THE VAULT. FOR METERS 6" AND LARGER, THE BYPASS MAY BE INSTALLED OUTSIDE OF THE VAULT.

CITY OF POWDER SPRINGS, GEORGIA	COMPOUND METERS AND VAULT CONSTRUCTION STANDARD	DATE: APPROVED:	STANDARD NO. 401.06

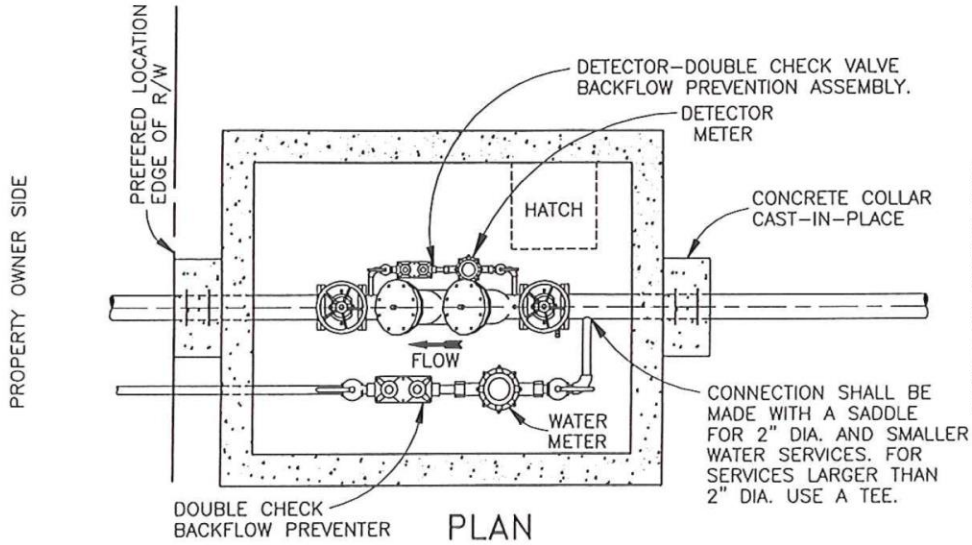

PLAN

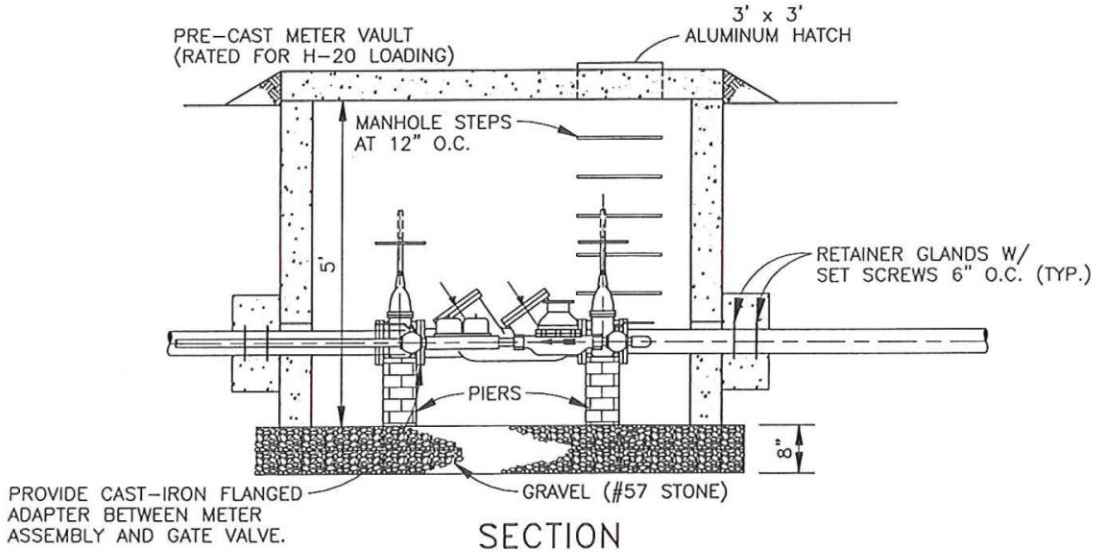

SECTION

NOTES:

1. BOXES EXCEEDING 5' IN DEPTH MUST BE APPROVED BY THE CITY
2. WHEN METER BOX CANNOT BE LOCATED ENTIRELY ON R/W, A PERMANENT EASEMENT SHALL BE OBTAINED TO PREVENT FENCES OR OTHER OBSTRUCTION FROM BEING ERECTED AROUND THE METER BOX.
3. COVER OPENING & STEPS TO BE PLACED NEAREST THE METER REGISTER.
4. THESE BOXES ARE NOT TO BE INSTALLED IN TRAFFIC AREAS WITHOUT PRIOR PERMISSION FROM THE
5. ALL VALVES AND FITTINGS INSIDE THE VAULT SHALL BE FLANGED.
6. REDUCED PRESSURE DETECTOR ASSEMBLY (RPDA) REQUIRED WHEN THE DANGER FROM BACKFLOW PRESENTS A HEALTH HAZARD. ALL RPDAs SHALL BE INSTALLED IN VAULTS SET ABOVE THE GROUND WITH DRAINS.

CITY OF POWDER SPRINGS, GEORGIA	DETECTOR/WATER METERS AND VAULT CONSTRUCTION STANDARD	DATE: APPROVED:	STANDARD NO. 401.07

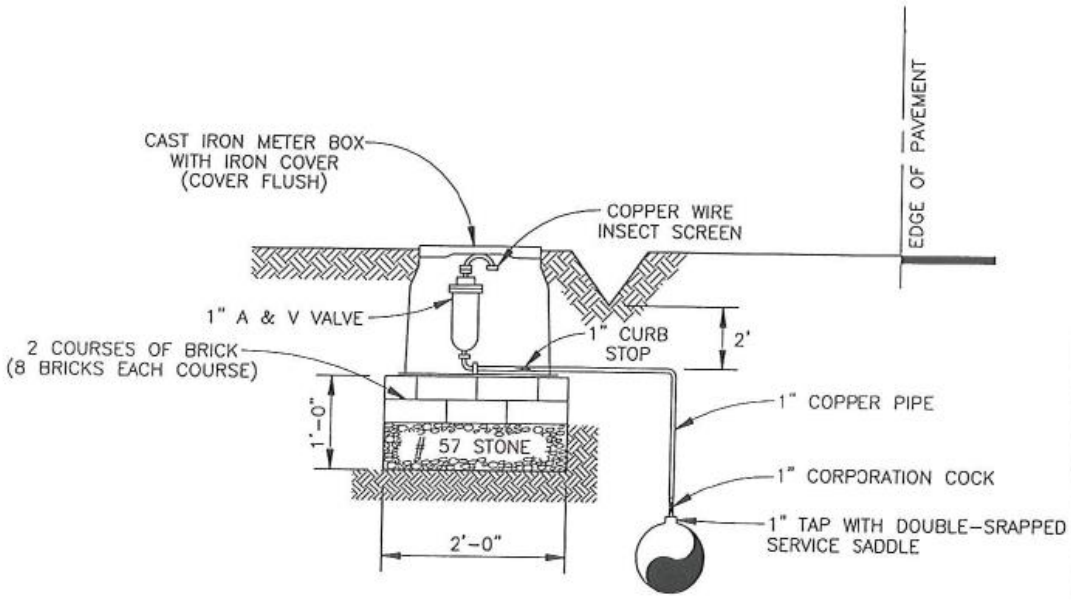

NOTES: 1. VALVE MARKER REQUIRED.

TYPICAL WATER AIR & VACUUM RELEASE VALVE ASSEMBLY

CITY OF POWDER SPRINGS, GEORGIA	WATER A&V RELEASE VALVE ASSEMBLY CONSTRUCTION STANDARD	DATE: APPROVED:	STANDARD NO. 401.08

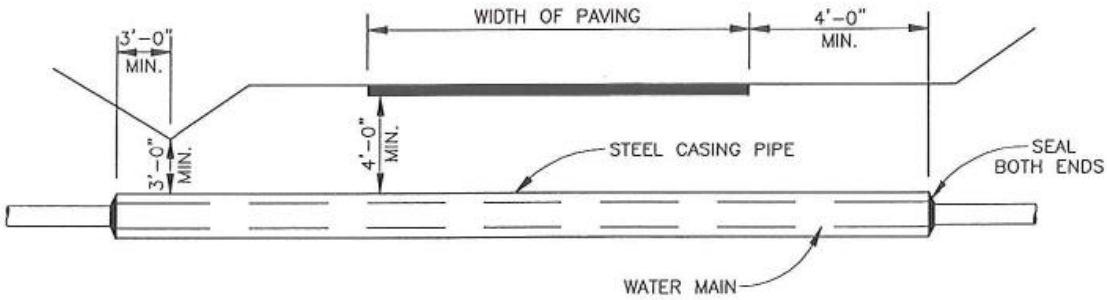

NOTES:

1. CASING PIPE SHALL EXTEND A MINIMUM OF 3' BEYOND TOE OF FILL SLOPES OR DITCH LINES AND 4' BEYOND EDGE OF PVMT. AND BACK OF CURB.
2. CASING SPACERS SHALL BE INSTALLED ACCORDING TO MANUFACTURER'S RECOMMENDATIONS.

TYPICAL ROAD CROSSING

CITY OF POWDER SPRINGS, GEORGIA	TYPICAL ROAD CROSSING CONSTRUCTION STANDARD	DATE: APPROVED:	STANDARD NO. 401.09

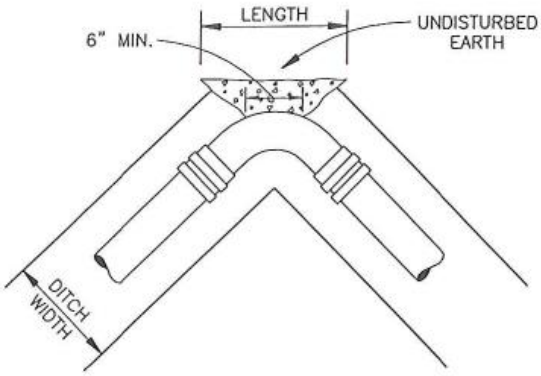

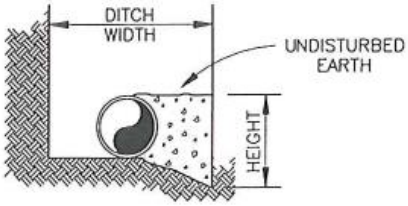

TABLE FOR CONCRETE BLOCKING
(16" PIPE, 200 PSI TEST PRESSURE)

FITTING	MINIMUM BEARING AREA LENGTH x HEIGHT
11 1/4° BEND	2' x 2'
22 1/2° BEND	2' x 3'
45° BEND	3' x 4'
90° BEND	6' x 4'
TEE	4' x 4'
DEAD END	4' x 4'

FOR SMALLER PIPE, THE ABOVE BLOCKING BEARING AREA CAN BE MULTIPLIED BY REDUCTION FACTORS SHOWN BELOW; HOWEVER, THE LEAST DIMENSION IS TO BE NOT LESS THAN 1 FOOT.

PIPE SIZE	REDUCTION FACTOR
12"	0.58
10"	0.41
8"	0.27
6"	0.16

NOTE:

1. SOIL BEARING STRENGTH OF 2500 PSI IS ASSUMED IN THE CALCULATIONS ABOVE.
2. REDUCTION FACTOR IS TO BE MULTIPLIED BY BEARING AREA, NOT BY LENGTH AND HEIGHT DIMENSIONS.

CONCRETE BLOCKING DETAIL

CITY OF POWDER SPRINGS, GEORGIA	CONCRETE BLOCKING DETAIL CONSTRUCTION STANDARD	DATE: APPROVED:	STANDARD NO. 401.10

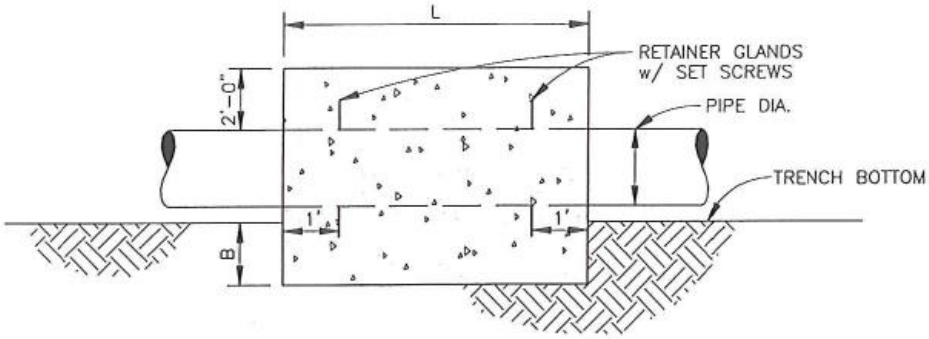

PROFILE VIEW

PIPE DIA.	L	B
8"	4'	1'
10"	4'	1'
12"	4'	1'
16"	4'	2'

NOTE:
CONCRETE COLLAR WIDTH EQUALS THE WIDTH OF THE TRENCH PLUS FOUR FEET (TWO FEET ON EACH SIDE OF THE TRENCH).

CONCRETE THRUST COLLAR

CITY OF POWDER SPRINGS, GEORGIA	CONCRETE THRUST COLLAR CONSTRUCTION STANDARD	DATE: APPROVED:	STANDARD NO. 401.11

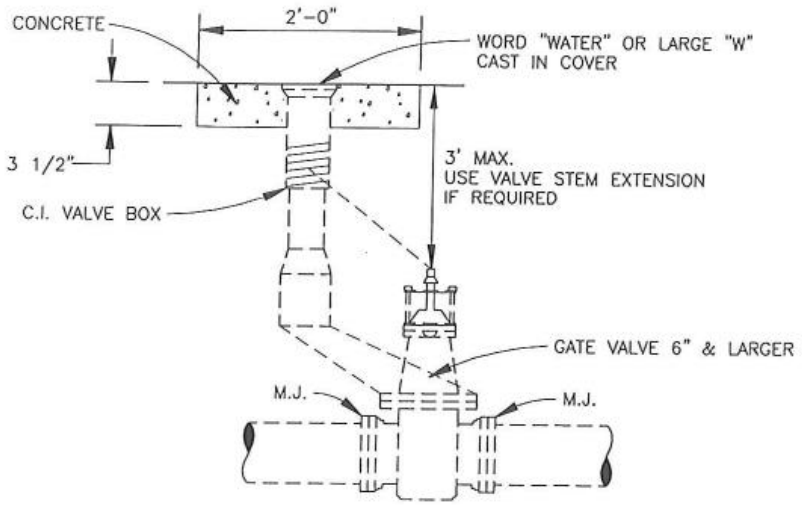

TYPICAL VALVE INSTALLATION

NOTES:

1. TOP OF EXTENSION SHALL BE NO MORE THAN THREE FEET BELOW FINAL GRADE.
2. CONTRACTOR IS RESPONSIBLE FOR IN FIELD MEASUREMENT OF DEPTH OF PIPE COVER TO DETERMINE NEED FOR VALVE STEM EXTENSION.

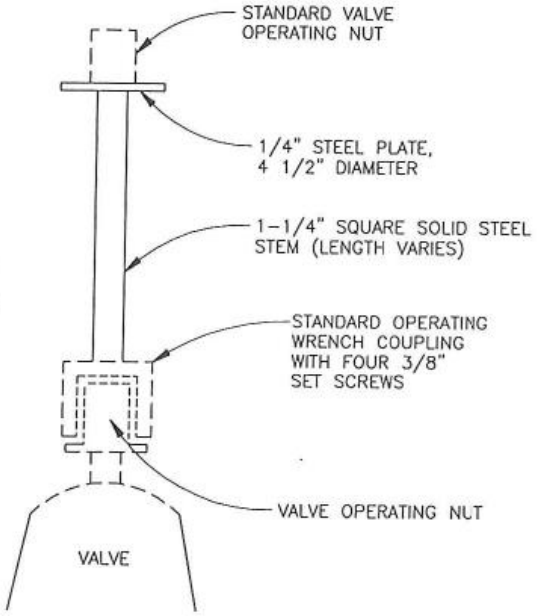

VALVE STEM EXTENSION DETAIL

CITY OF POWDER SPRINGS, GEORGIA	TYPICAL VALVE INSTALLATION CONSTRUCTION STANDARD	DATE: APPROVED:	STANDARD NO. 401.12

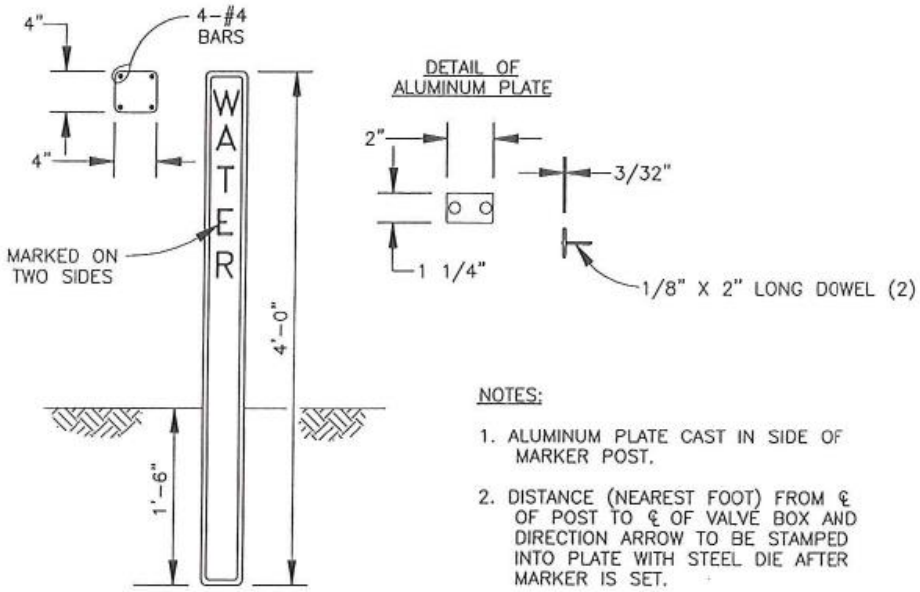

NOTES:

1. ALUMINUM PLATE CAST IN SIDE OF MARKER POST.
2. DISTANCE (NEAREST FOOT) FROM ℄ OF POST TO ℄ OF VALVE BOX AND DIRECTION ARROW TO BE STAMPED INTO PLATE WITH STEEL DIE AFTER MARKER IS SET.

DETAIL OF CONCRETE VALVE MARKER

CITY OF POWDER SPRINGS, GEORGIA	CONCRETE VALVE MARKER CONSTRUCTION STANDARD	DATE: APPROVED:	STANDARD NO. 401.13

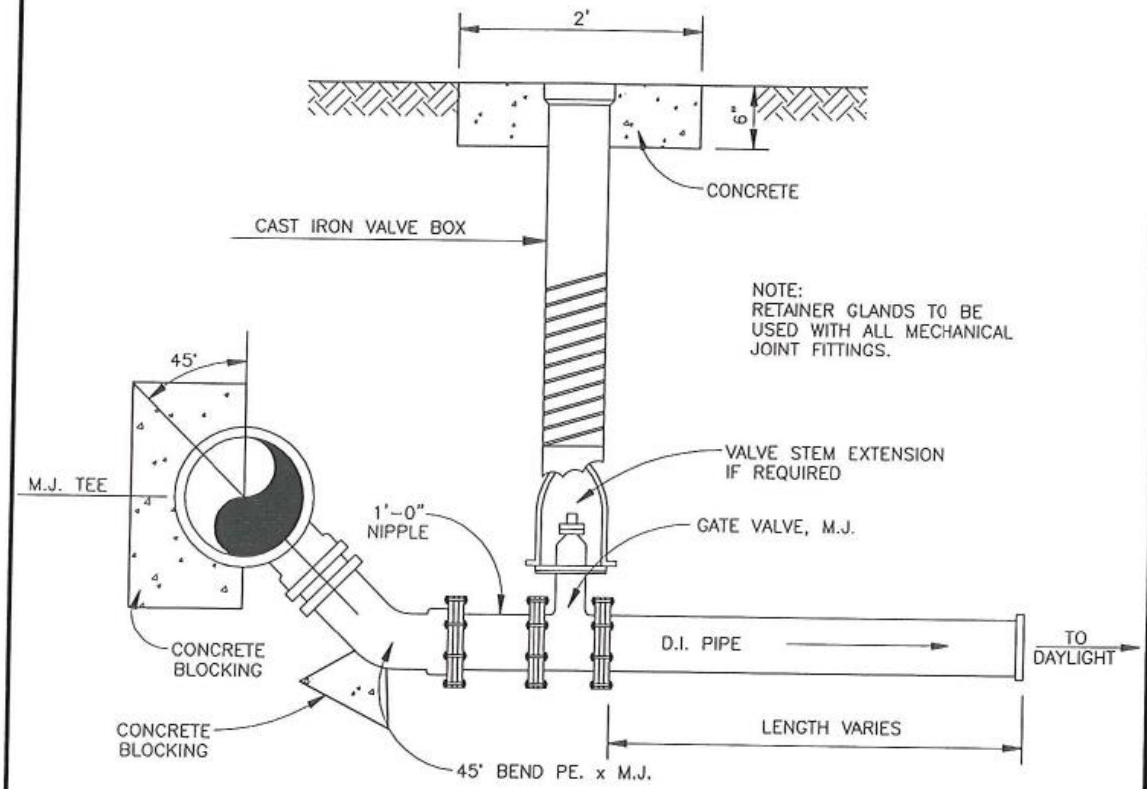

BLOW-OFF ASSEMBLY

NOT TO SCALE

CITY OF POWDER SPRINGS, GEORGIA	BLOW-OFF VALVE ASSEMBLY CONSTRUCTION STANDARD	DATE: APPROVED:	STANDARD NO. 401.14

NOTES:

1. MANHOLES TO BE FLUSH WITH PAVEMENT IN PAVED AREAS.
2. MANHOLES ON OUTFALL LINES ARE TO BE 18" ABOVE GROUND.
3. WATER-TIGHT MANHOLE FRAME AND COVERS SHALL BE DESIGNATED ON PLAN AND PROFILE, AND SHALL BE REQUIRED IN FLOOD PLAINS OR AREAS SUBJECT TO FLOODING (SUBMERGED DURING RAINFALL).

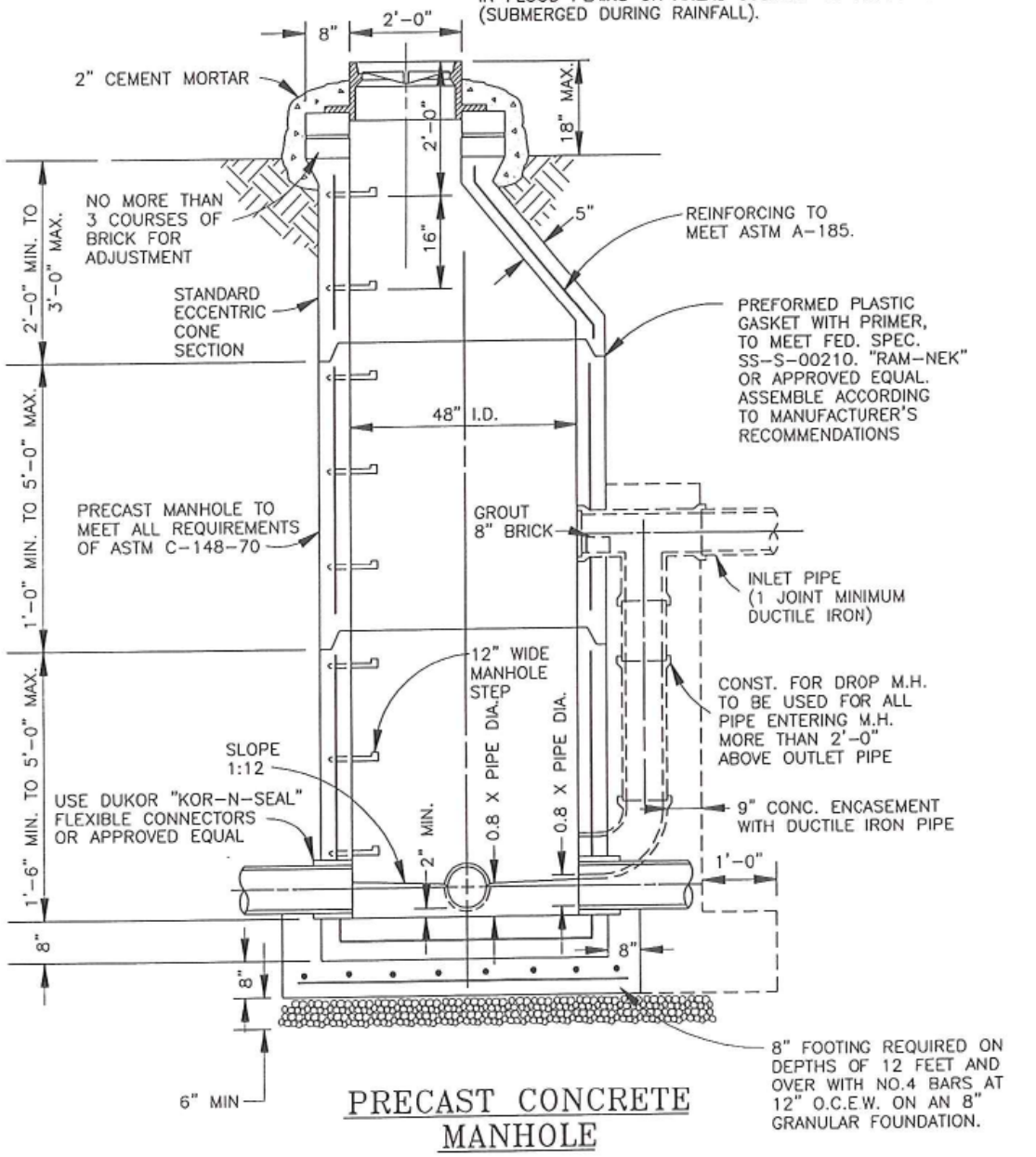

PRECAST CONCRETE MANHOLE

CITY OF POWDER SPRINGS, GEORGIA	PRECAST CONCRETE MANHOLE CONSTRUCTION STANDARD	DATE: APPROVED:	STANDARD NO. 402.01

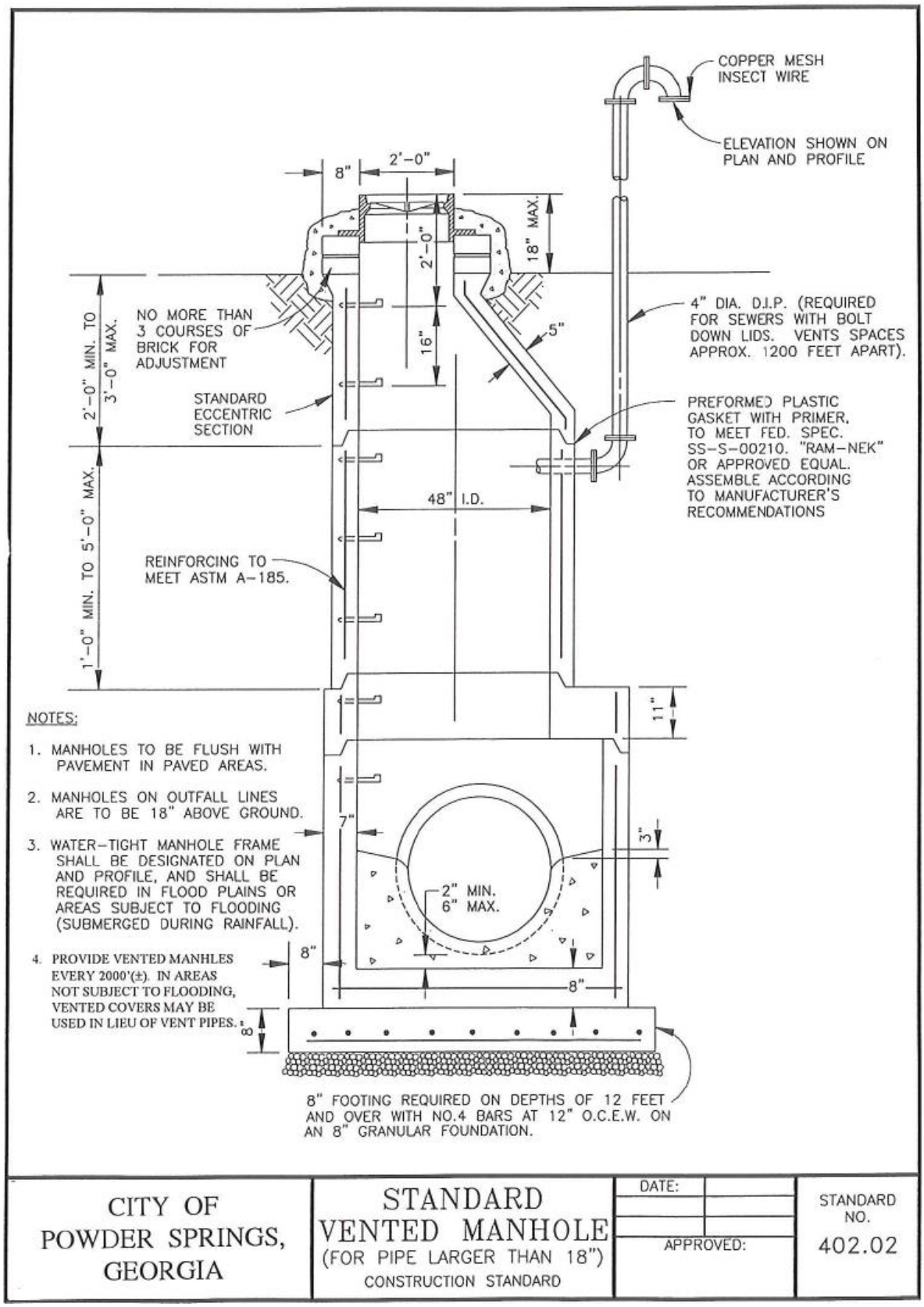
COPPER MESH INSECT WIRE
ELEVATION SHOWN ON PLAN AND PROFILE
8"
2'-0"
18" MAX.
2'-0"
16"
5"
NO MORE THAN 3 COURSES OF BRICK FOR ADJUSTMENT
4" DIA. D.I.P. (REQUIRED FOR SEWERS WITH BOLT DOWN LIDS. VENTS SPACES APPROX. 1200 FEET APART).
2'-0" MIN. TO 3'-0" MAX.
STANDARD ECCENTRIC SECTION
PREFORMED PLASTIC GASKET WITH PRIMER, TO MEET FED. SPEC. SS-S-00210. "RAM-NEK" OR APPROVED EQUAL. ASSEMBLE ACCORDING TO MANUFACTURER'S RECOMMENDATIONS
48" I.D.
1'-0" MIN. TO 5'-0" MAX.
REINFORCING TO MEET ASTM A-185.
11"
NOTES:
1. MANHOLES TO BE FLUSH WITH PAVEMENT IN PAVED AREAS.
2. MANHOLES ON OUTFALL LINES ARE TO BE 18" ABOVE GROUND.
3. WATER-TIGHT MANHOLE FRAME SHALL BE DESIGNATED ON PLAN AND PROFILE, AND SHALL BE REQUIRED IN FLOOD PLAINS OR AREAS SUBJECT TO FLOODING (SUBMERGED DURING RAINFALL).
4. PROVIDE VENTED MANHLES EVERY 2000'(±). IN AREAS NOT SUBJECT TO FLOODING, VENTED COVERS MAY BE USED IN LIEU OF VENT PIPES.
7"
3"
2" MIN.
6" MAX.
8"
8"
8"
8" FOOTING REQUIRED ON DEPTHS OF 12 FEET AND OVER WITH NO.4 BARS AT 12" O.C.E.W. ON AN 8" GRANULAR FOUNDATION.
CITY OF POWDER SPRINGS, GEORGIA
STANDARD VENTED MANHOLE
(FOR PIPE LARGER THAN 18")
CONSTRUCTION STANDARD
DATE:
APPROVED:
STANDARD NO.
402.02

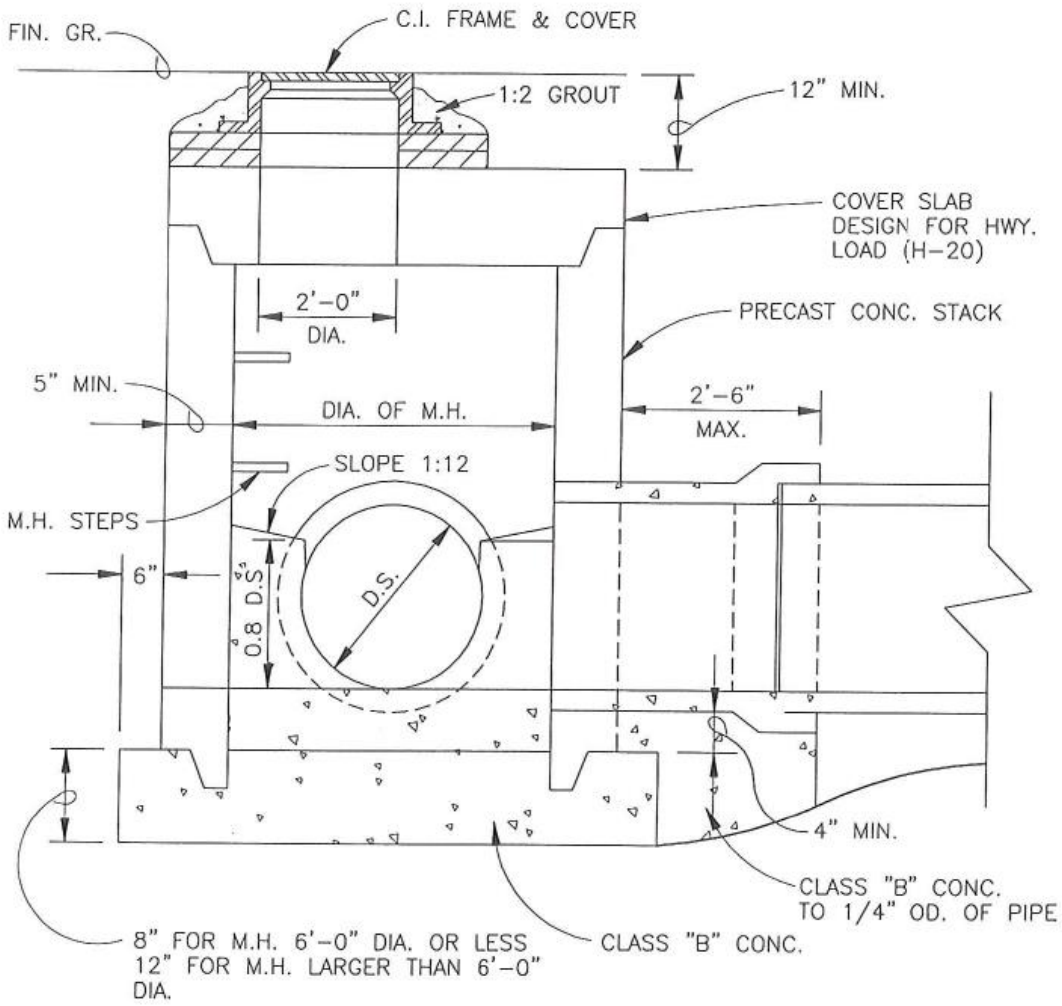

SHALLOW MANHOLE DETAIL

CITY OF POWDER SPRINGS, GEORGIA	PRECAST CONCRETE MANHOLE CONSTRUCTION STANDARD	DATE: APPROVED:	STANDARD NO. 402.03

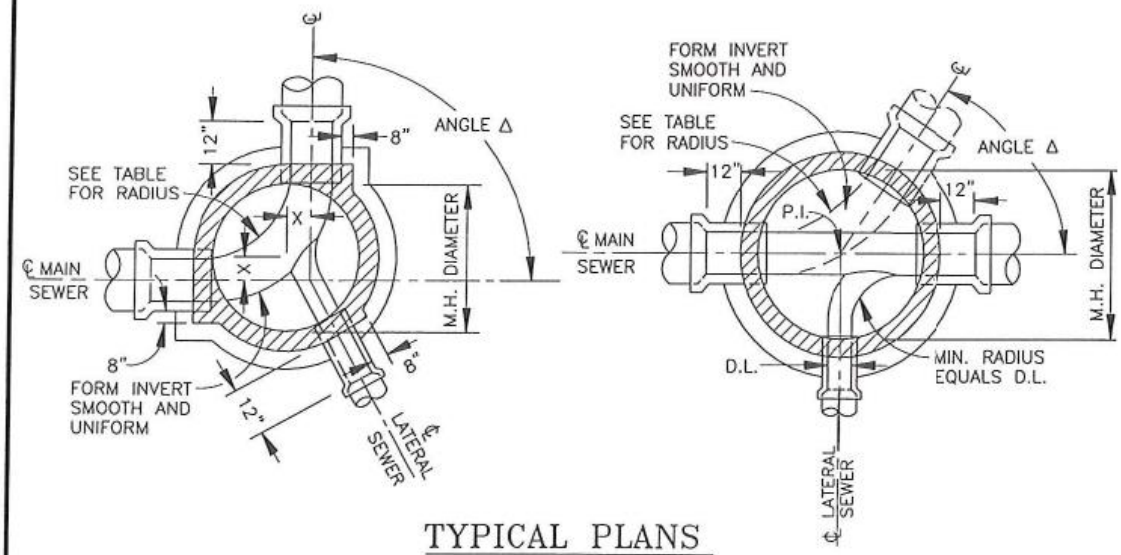

TYPICAL PLANS
STANDARD MANHOLE

STANDARD MANHOLE
SCHEDULE OF GOVERNING DIMENSIONS

PIPE SIZE	ANGLE Δ	MANHOLE DIAMETER	"R"	"X"
8" TO 18"	0° TO 90°	4'–0"	2'–0"	0"
21" & 24"	0° TO 60°	4'–0"	2'–0"	6"
21" & 24"	60° TO 70°	5'–0"	2'–0"	6"
21" & 24"	70° TO 80°	5'–0"	2'–0"	7- 1/2"
21" & 24"	80° TO 90°	5'–0"	2'–0"	10- 1/2"
30" & 36"	0° TO 60°	5'–0"	3'–0"	8"
30" & 36"	60° TO 70°	6'–0"	3'–0"	10"
30" & 36"	70° TO 80°	6'–0"	3'–0"	13"
30" & 36"	80° TO 90°	6'–0"	3'–0"	16"
42"	0° TO 35°	6'–0"	3'–0"	3"
42"	35° TO 50°	6'–0"	6'–0"	6"
42"	50° TO 90°	7'–0"	6'–0"	0"
48" & 54"	0° TO 35°	6'–0" & 7'–0"	6'–0"	0"
48" & 54"	35° TO 90°	8'–0"	6'–0"	0"

CITY OF POWDER SPRINGS, GEORGIA	STANDARD MANHOLE PLANS CONSTRUCTION STANDARD	DATE: APPROVED:	STANDARD NO. 402.04

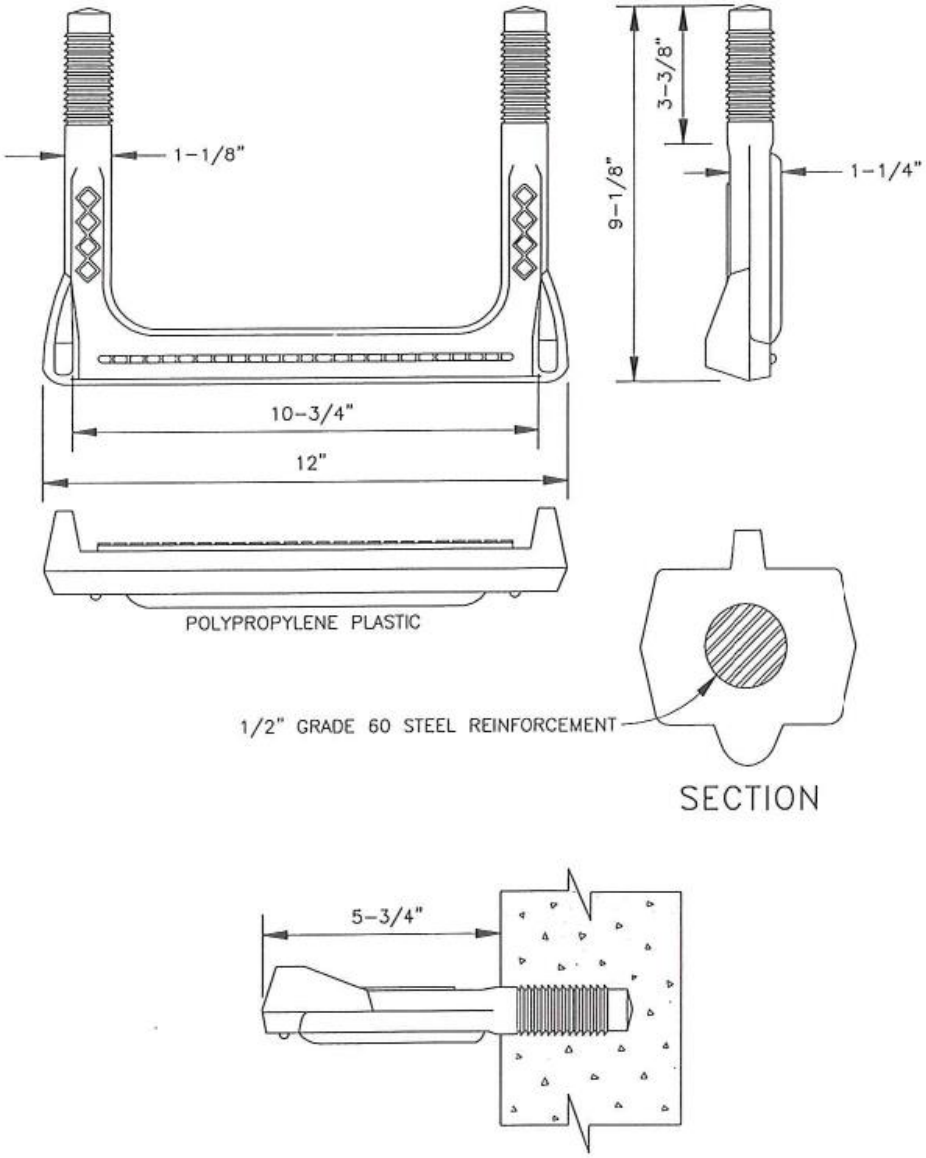

MANHOLE STEP
DETAIL

CITY OF POWDER SPRINGS, GEORGIA	MANHOLE STEP CONSTRUCTION STANDARD	DATE: APPROVED:	STANDARD NO. 402.05

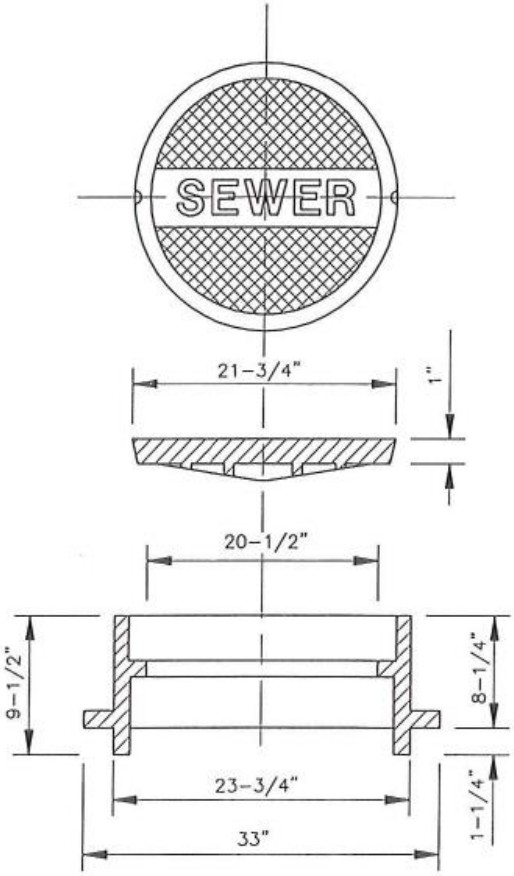

MANHOLE FRAME AND COVER

TOTAL WEIGHT: 300 LB. NON-TRAFFIC
365 LB. IN ROADWAY OR PARKING LOT
435 LB. WATER-TIGHT

CITY OF POWDER SPRINGS, GEORGIA	STANDARD MANHOLE FRAME & COVER CONSTRUCTION STANDARD	DATE: APPROVED:	STANDARD NO. 402.06

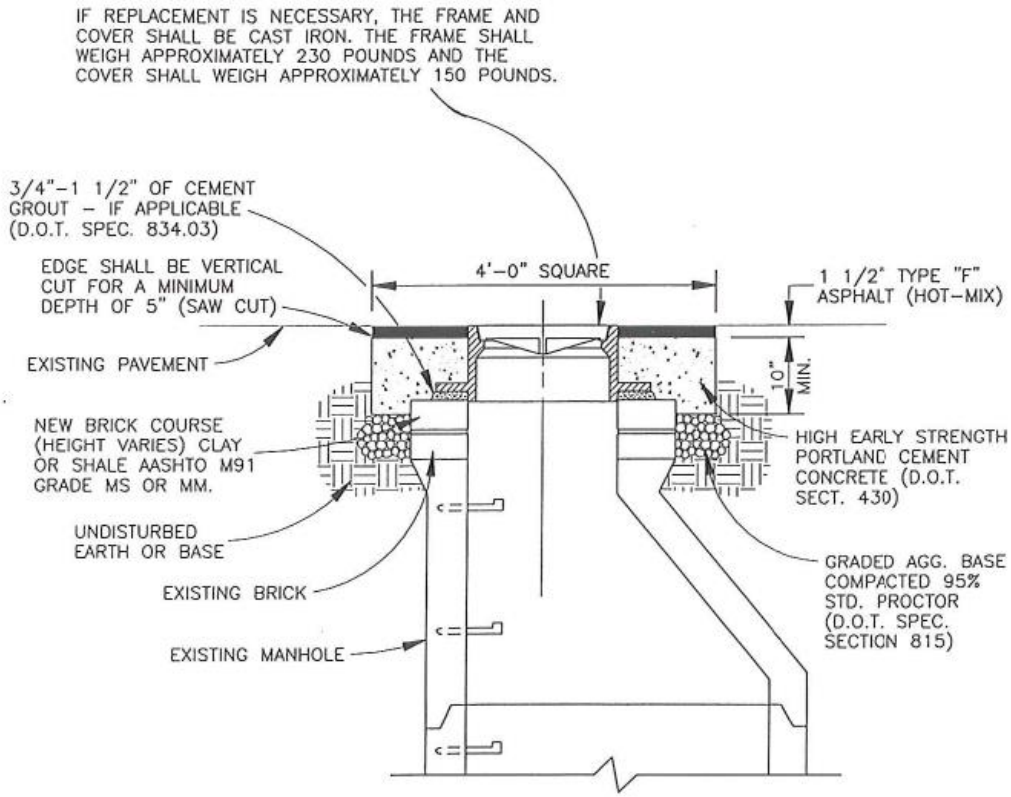

MANHOLE FRAME-GRADE ADJUSTMENT

NOTES:

1. PORTLAND CONCRETE FOR COLLAR SHALL BE A MIN. OF 10" THICK AND SHALL EXTEND FROM THE LAST FULL COURSE OF BRICK TO 1 1/2" BELOW THE EXISTING PAVEMENT.
2. THE CONTRACTOR HAS THE OPTION OF USING PORTLAND CONCRETE FOR THE FULL DEPTH (FROM THE ASPHALT TO UNDISTURBED EARTH) OR AS SHOWN ABOVE.
3. THE CONCRETE SHALL BE LEFT WITH A RAKED FINISH TO PROVIDE A ROUGH SURFACE FOR THE ASPHALT TO BOND TO BITUMINOUS TACK AND ASPHALT SHALL BE PLACED PER CURRENT D.O.T. SPECIFICATIONS.
4. STEEL PLATES MAY BE REQUIRED BY THE CITY IN HIGH TRAFFIC AREAS TO PROTECT THE FRESH CONCRETE FOR A MINIMUM OF 40 HOURS. IN THESE HIGH TRAFFIC AREAS BARRICADES, CONES, ETC. WILL NOT BE ALLOWED.
5. BEFORE WORKING IN AN AREA, THE CONTRACTOR SHALL NOTIFY THE CITY

CITY OF POWDER SPRINGS, GEORGIA	MANHOLE FRAME-GRADE ADJUSTMENT CONSTRUCTION STANDARD	DATE: APPROVED:	STANDARD NO. 402.07

NOTE:

1. SEWER LATERAL TO BE LOCATED 5 FEET FROM THE SIDE LOT LINE ON THE DOWNSTEAM SIDE OF THE SANITARY SEWER.
2. MIN. SLOPE OF 1% REQ'D. FOR 6" SERVICE. MIN SLOPE OF 2% REQ'D FOR 4" SERVICE.

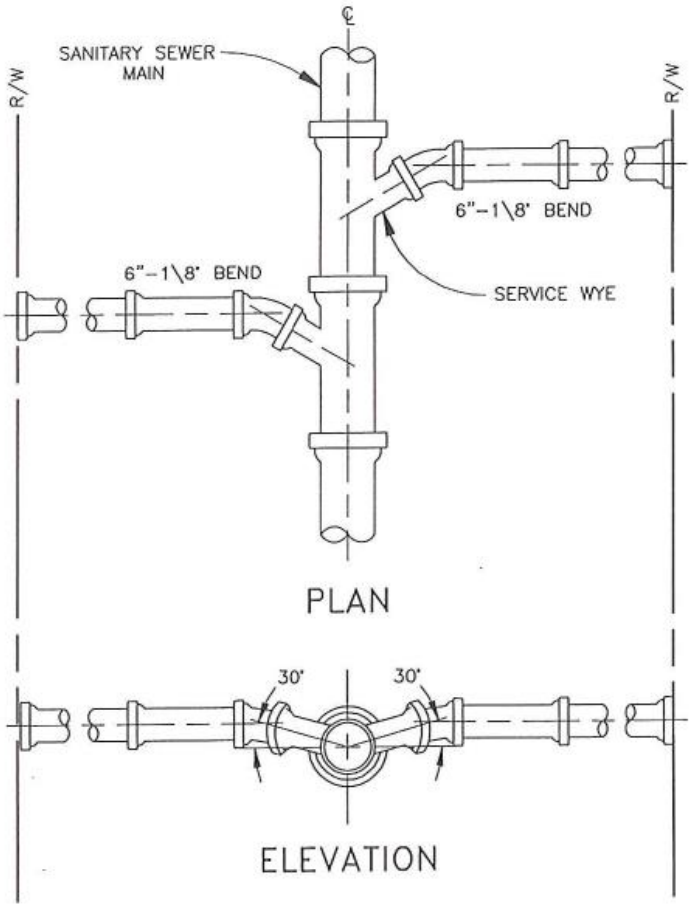

SEWER SERVICE LATERAL

CITY OF POWDER SPRINGS, GEORGIA	SEWER SERVICE LATERAL CONSTRUCTION STANDARD	DATE: APPROVED:	STANDARD NO. 402.08

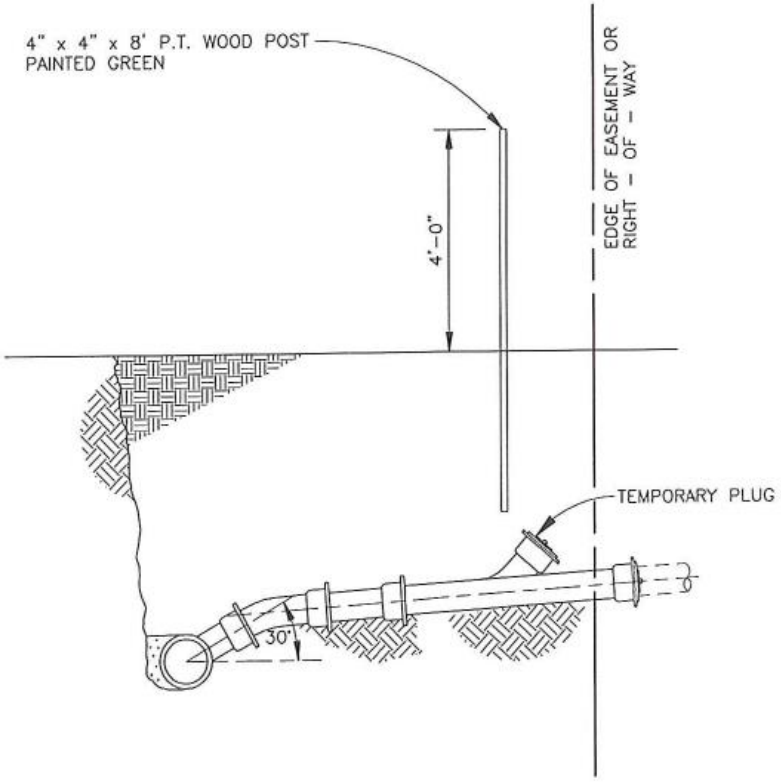

SANITARY
SEWER SERVICE
LOCATION DETAIL

CITY OF POWDER SPRINGS, GEORGIA	SEWER SERVICE LOCATION DETAIL CONSTRUCTION STANDARD	DATE: APPROVED:	STANDARD NO. 402.09

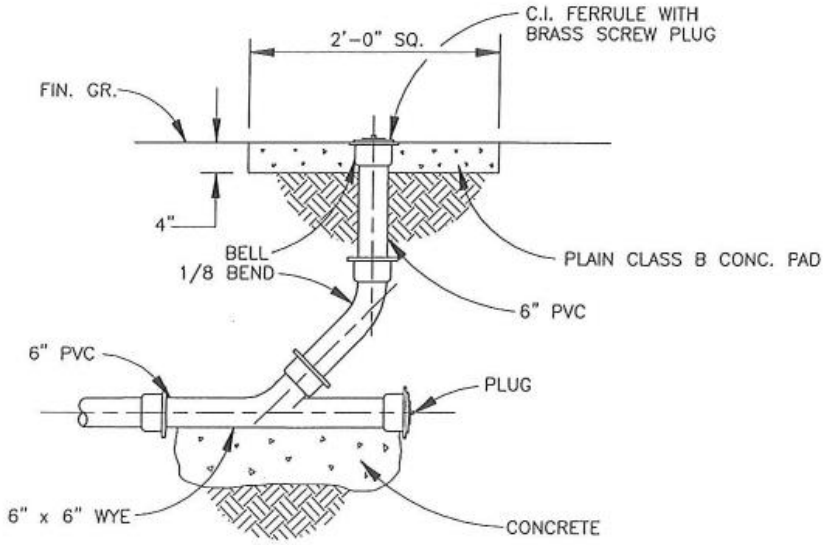

CLEANOUT DETAIL

CITY OF POWDER SPRINGS, GEORGIA	CLEANOUT DETAIL CONSTRUCTION STANDARD	DATE:	JAN. '96	STANDARD NO. 402.10
		APPROVED:		

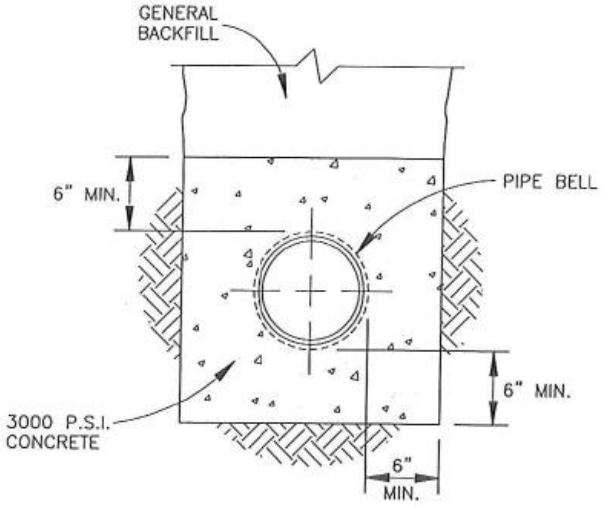

CONCRETE ENCASEMENT

CITY OF POWDER SPRINGS, GEORGIA	CONCRETE ENCASEMENT CONSTRUCTION STANDARD	DATE:	JAN. '96	STANDARD NO. 402.11
		APPROVED:		

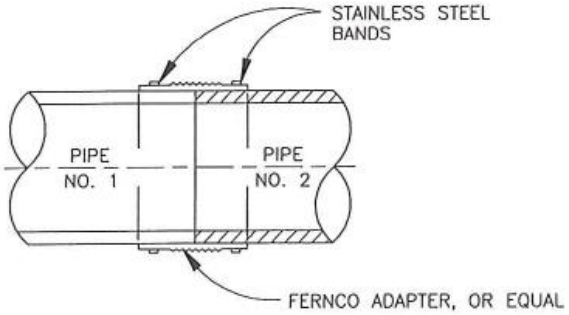

PIPE ADAPTER
JOINING DIFFERENT TYPES OF PIPE

CITY OF POWDER SPRINGS, GEORGIA	TYPICAL PIPE ADAPTER CONSTRUCTION STANDARD	DATE: APPROVED:	STANDARD NO. 402.12

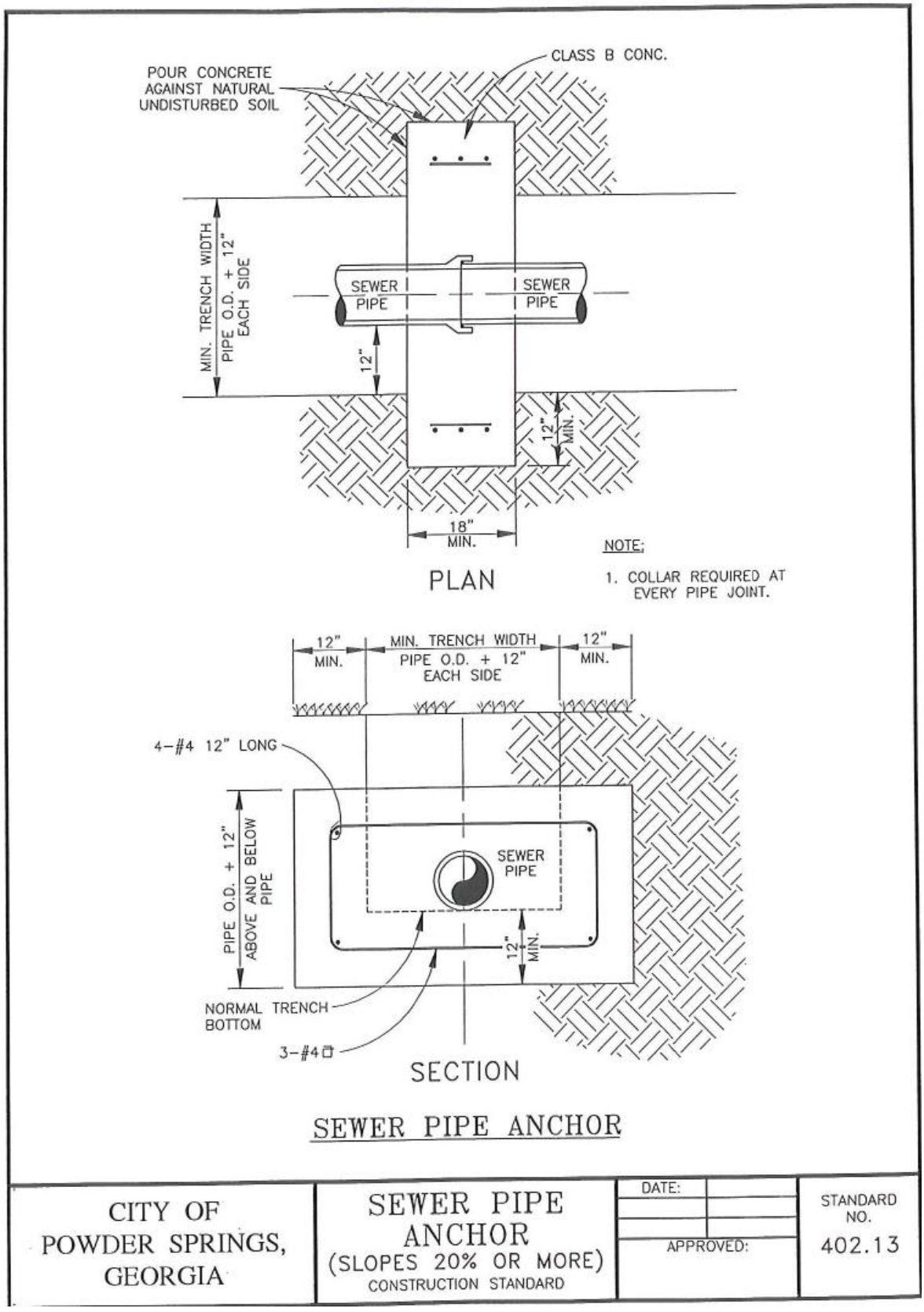
CLASS B CONC.
POUR CONCRETE AGAINST NATURAL UNDISTURBED SOIL
MIN. TRENCH WIDTH
PIPE O.D. + 12" EACH SIDE
SEWER PIPE
SEWER PIPE
12"
12" MIN.
18" MIN.
PLAN
NOTE;
1. COLLAR REQUIRED AT EVERY PIPE JOINT.
12" MIN.
MIN. TRENCH WIDTH
PIPE O.D. + 12" EACH SIDE
12" MIN.
4-#4 12" LONG
PIPE O.D. + 12" ABOVE AND BELOW PIPE
SEWER PIPE
12" MIN.
NORMAL TRENCH BOTTOM
3-#4
SECTION
SEWER PIPE ANCHOR
CITY OF POWDER SPRINGS, GEORGIA
SEWER PIPE ANCHOR
(SLOPES 20% OR MORE)
CONSTRUCTION STANDARD
DATE:
APPROVED:
STANDARD NO.
402.13

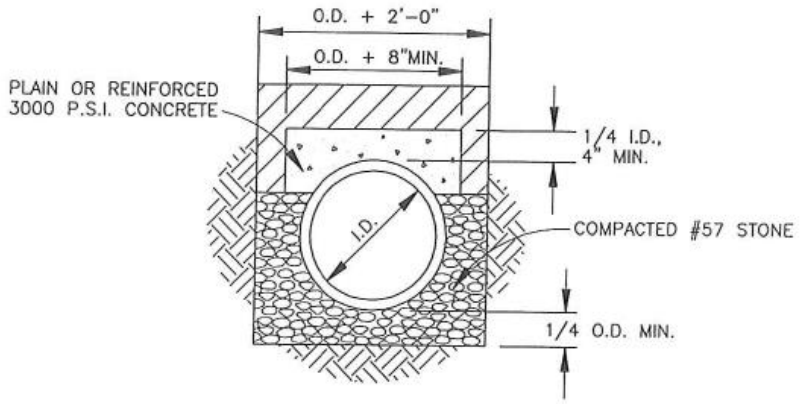

CONCRETE ARCH

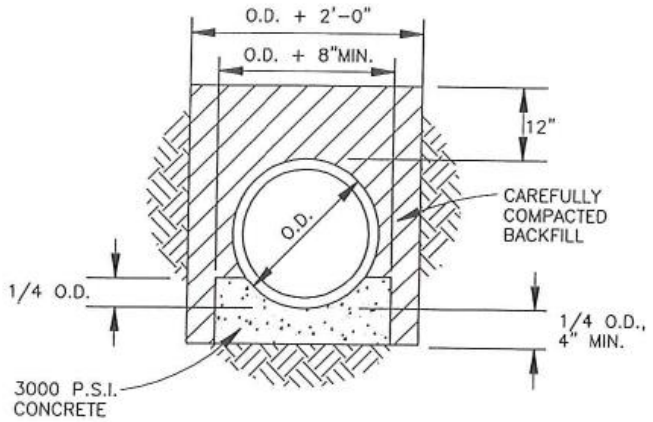

CONCRETE CRADLE

CITY OF POWDER SPRINGS, GEORGIA	PIPE CLASS 'A' BEDDING CONSTRUCTION STANDARD	DATE: APPROVED:	STANDARD NO. 402.14.

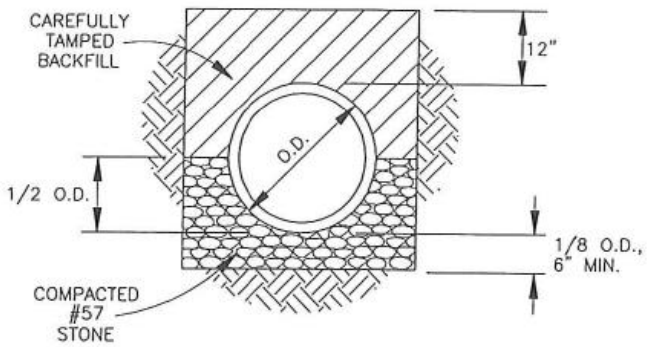

COMPACTED GRANULAR BEDDING
LOAD FACTOR 1.9

PIPE CLASS 'B' BEDDING

CITY OF POWDER SPRINGS, GEORGIA	PIPE CLASS 'B' BEDDING CONSTRUCTION STANDARD	DATE: APPROVED:	STANDARD NO. 402.15

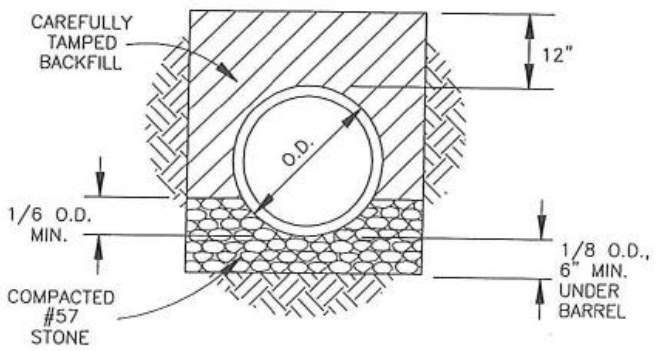

GRANULAR BEDDING
LOAD FACTOR 1.5

PIPE CLASS 'C' BEDDING

CITY OF POWDER SPRINGS, GEORGIA	PIPE CLASS 'C' BEDDING CONSTRUCTION STANDARD	DATE: APPROVED:	STANDARD NO. 402.16

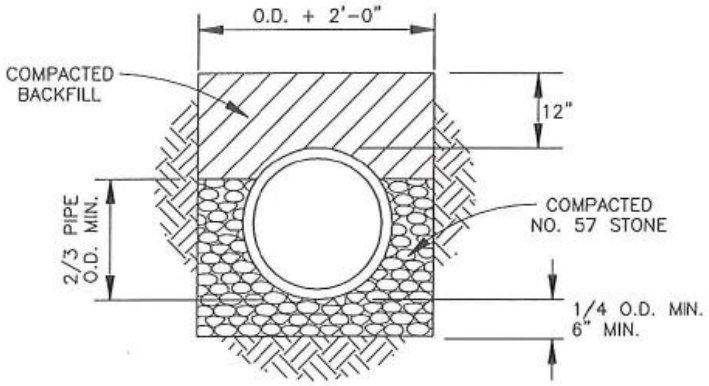

MINIMUM P.V.C. PIPE BEDDING DETAIL

NOT TO SCALE

CITY OF POWDER SPRINGS, GEORGIA	PIPE CLASS 'B' BEDDING CONSTRUCTION STANDARD	DATE: APPROVED:	STANDARD NO. 402.17

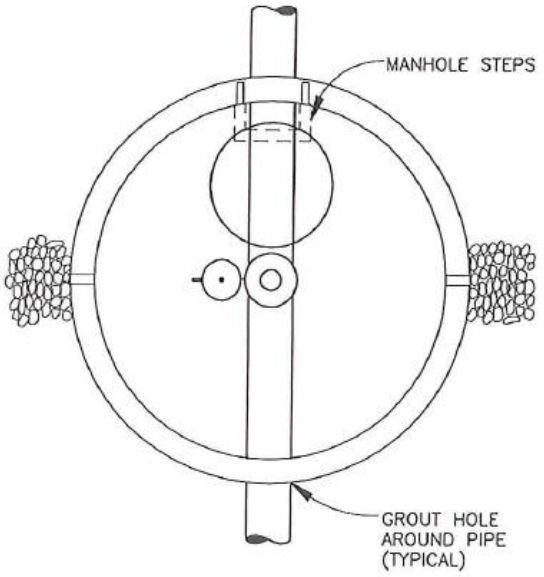

PLAN

NOTES:

1. NO PIPE JOINTS ALLOWED WITHIN MANHOLE.
2. ALL MANHOLES IN ROAD RIGHT-OF-WAY SHALL BE FLUSH WITH GRADE

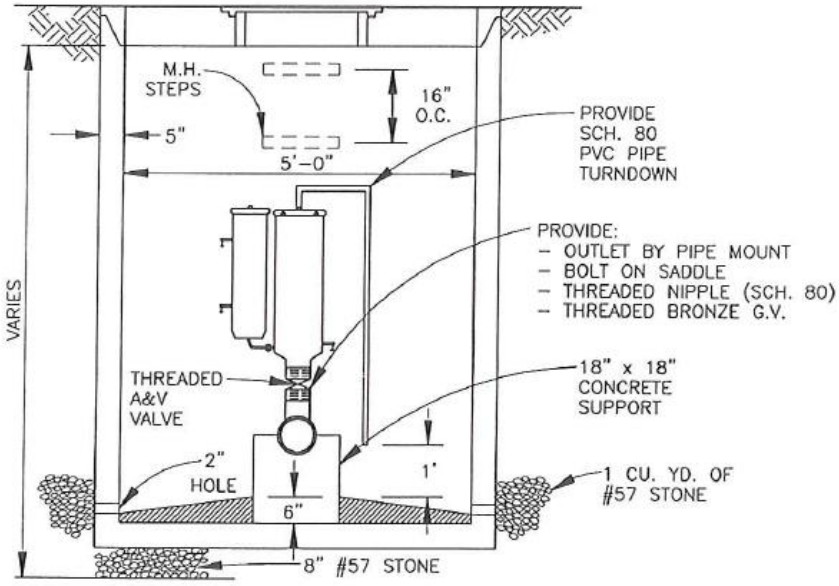

SECTION

SEWER AIR & VACUUM VALVE ASSEMBLY

CITY OF POWDER SPRINGS, GEORGIA	SEWER AIR & VACUUM VALVE ASSEMBLY CONSTRUCTION STANDARD	DATE: APPROVED:	STANDARD NO. 402.18

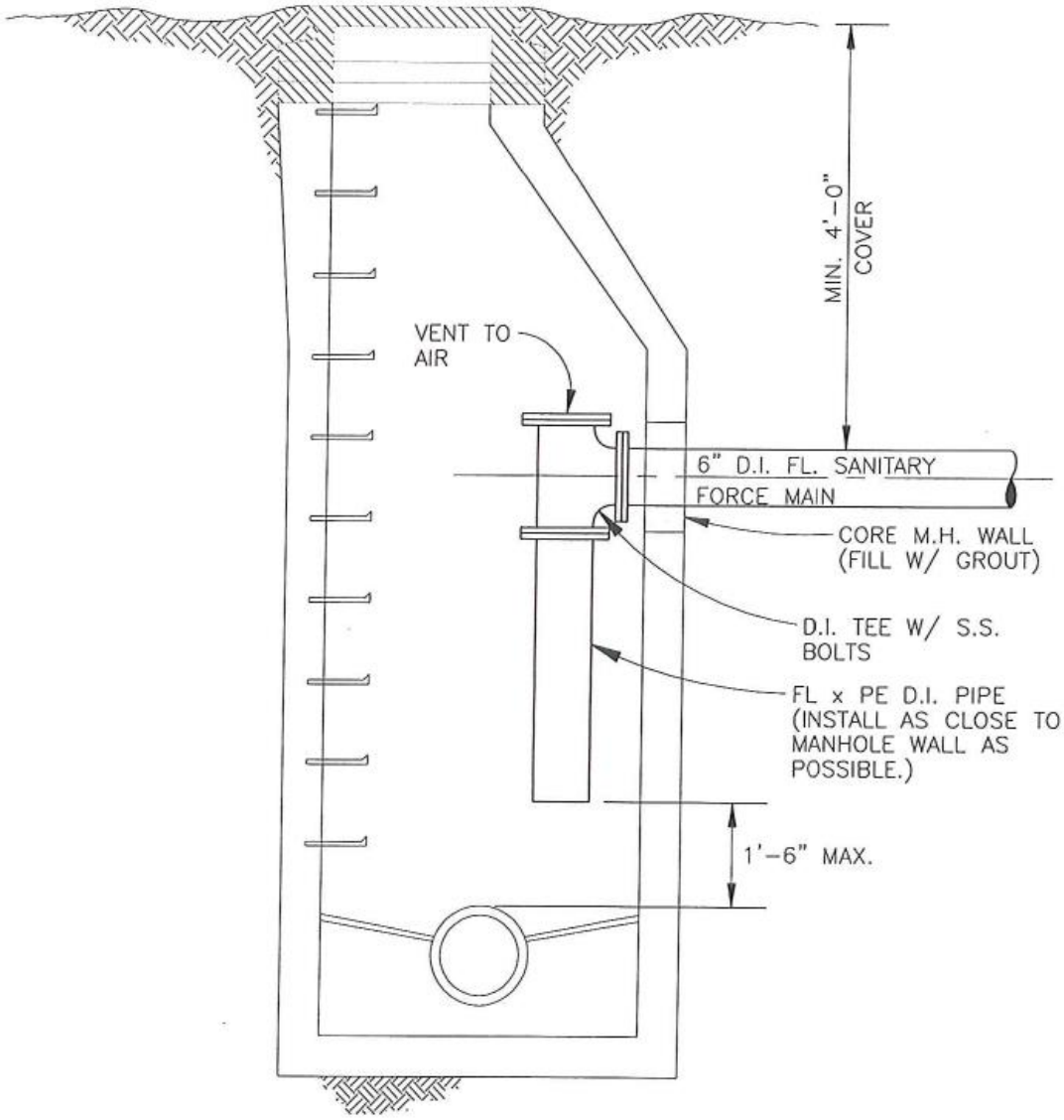

FORCE MAIN CONNECTION TO EXISTING MANHOLE

CITY OF POWDER SPRINGS, GEORGIA	FORCE MAIN CONNECTION TO MANHOLE CONSTRUCTION STANDARD	DATE: APPROVED:	STANDARD NO. 402.19

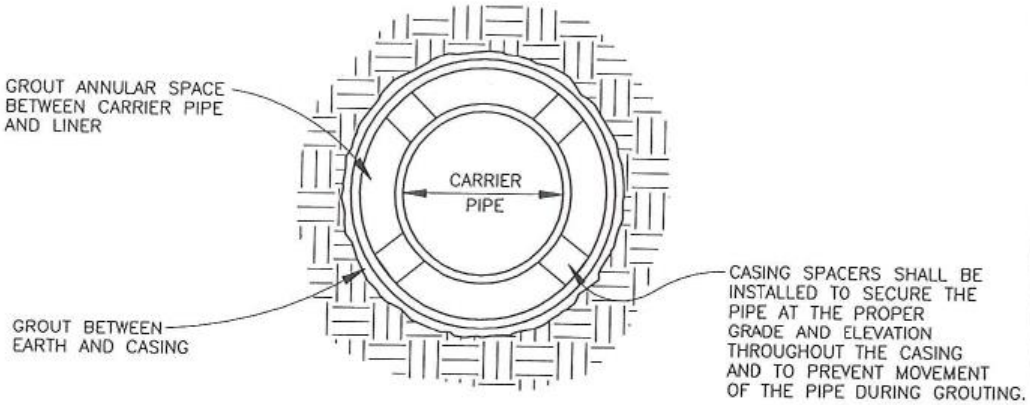

CASING SPACER DETAIL

CITY OF POWDER SPRINGS, GEORGIA	SEWER CASING SPACER DETAIL CONSTRUCTION STANDARD	DATE: APPROVED:	STANDARD NO. 402.20